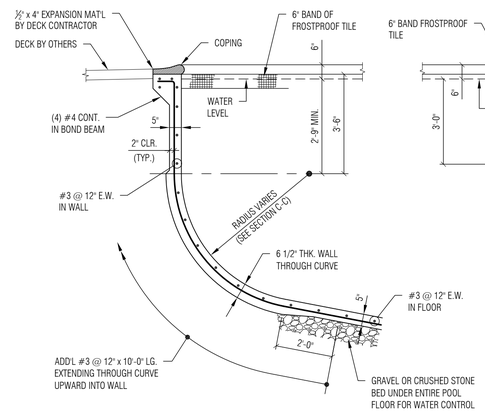

SECTION A

DEEP END

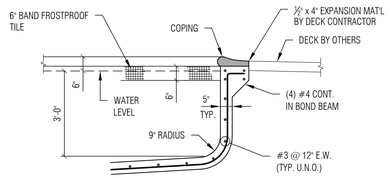

SECTION B

SHALLOW END

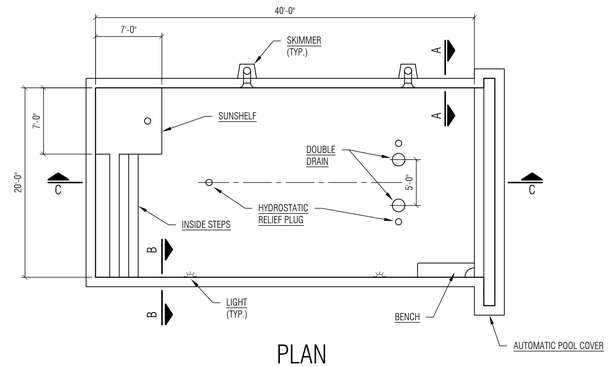

PLAN

	ANSI/NSPI-5																
POOL	MAX. DIVING BOARD LENGTH	MAX. HEIGHT OVER WATER	MINIMUM DEPTHS AT POINT				MINIMUM WIDTHS AT POINT				MINIMUM LENGTHS BETWEEN POINTS					
TYPE	DBL	HOW	A	B	C	D	A	B	C	D	WA	AB	BC	CD	DE	WE
0	**DIVING EQUIPMENT IS PROHIBITED**															

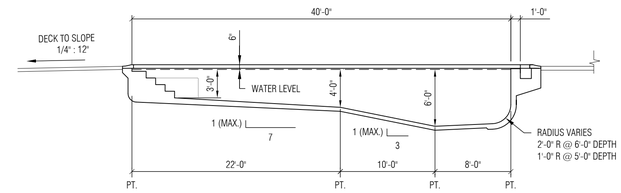

SECTION C-C

NOTES

1. THESE CONSTRUCTION DOCUMENTS ARE STANDARDS AND APPLY TO ALL POOL SHAPES.
2. POOL FLOOR TO BE PLACED ON UNDISTURBED NATURAL SOIL. NATURAL SOIL SHALL BE A WELL DRAINING GRANULAR TYPE WITH A MINIMUM ALLOWABLE BEARING CAPACITY = 2,000 PSF.
3. POOL STRUCTURES DESIGNED IN ACCORDANCE WITH THE AMERICAN CONCRETE INSTITUTE (ACI) STANDARD FOR "BUILDING CODE REQUIREMENTS FOR REINFORCING CONCRETE - 318".
4. PNEUMATICALLY APPLIED CONCRETE TO DEVELOP A MINIMUM COMPRESSIVE STRENGTH OF 4,000 PSI @ 28 DAYS.
5. ALL STEEL REINFORCING SHALL BE DEFORMED BARS COMPLYING WITH AMERICAN SOCIETY FOR TESTING AND MATERIAL (ASTM) SPECIFICATION A615-40. LAP BARS A MINIMUM OF 15 INCHES.
6. POOL SHELL CONSTRUCTION SHALL BE IN CONFORMANCE WITH ALL APPLICABLE ANSI/NSPI POOL STANDARDS, LATEST EDITIONS.
7. ALL SUCTION DRAINS SHALL HAVE A MINIMUM SEPARATION OF 36".
8. ALL SUCTION COVERS MUST COMPLY WITH ANSI/ASME A112.19.8M.
9. THE POOL SHELL DESIGN DOES NOT CONSIDER ANY HARDSCAPE/LANDSCAPE SURCHARGE LOADS.

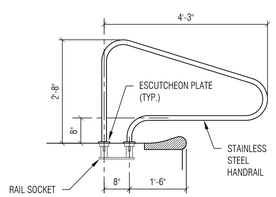

DECK MOUNTED HANDRAIL

(OPTIONAL)

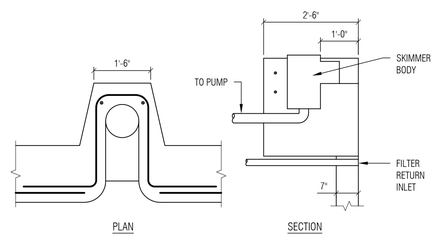

SKIMMER DETAIL

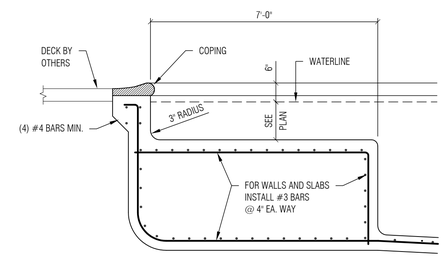

SUNSHELF DETAIL

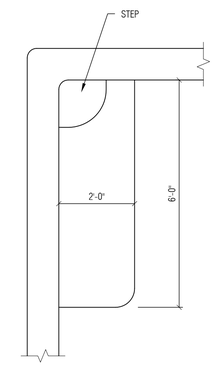

PLAN

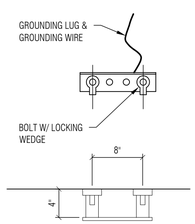

DECK MOUNTED STAIR/SPA RAIL SOCKET DETAIL

(OPTIONAL)

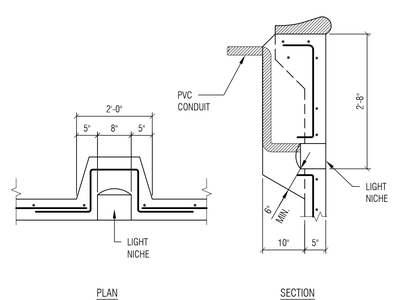

LIGHT NICHE DETAIL

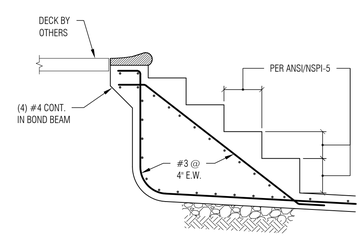

STEP DETAIL

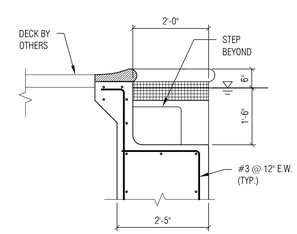

SECTION

BENCH DETAIL

lg engineering, LLC
1606 N. 18th Street
Rear Building
Allentown, PA 18104
610-730-2221
structural engineers

THIS DRAWING IS THE EXCLUSIVE PROPERTY OF ABOVE MENTIONED PARTIES AND MAY NOT BE REPRODUCED IN ANY FORM WITHOUT WRITTEN AUTHORIZATION FROM ABOVE MENTIONED PARTIES. UNAUTHORIZED REPRODUCTION OR USE OF ANY OR ALL PARTS OF THIS DRAWING WILL CONSTITUTE A VIOLATION OF U.S. COPYRIGHT LAWS.

SEAL

STATE OF NEW YORK · D. SCOTT BIELEY · 066393 · LICENSED PROFESSIONAL ENGINEER

1/5/2022

D. SCOTT BIELEY
NEW YORK PROFESSIONAL ENGINEER
LICENSE NO. 066393

CLIENT

BLUE HAVEN POOLS

CALVITTI POOLS AND SPAS INC.
BLUE HAVEN POOLS & SPAS

2273 NORTH PENN ROAD
HATFIELD, PA 19440
P: 732-882-4660

PROJECT

PHILLIPS RESIDENCE

107 JUDSON AVE.
DOBBS FERRY, NY 10522

REVISION/RELEASE

0	ISSUED FOR CONSTRUCTION 10/21/2021
1	
2	
3	

DRAWING TITLE

CUSTOM POOL PLAN

DESIGNED	SB
DRAWN	MS
CHECKED	SB
JOB. NO.	BHPS2131
SCALE	AS NOTED
DATE	10/21/2021

DWG. NO.

S101

SHEET NO. 1 OF 1 SHEET(S)

REV. 0

10/21/21