POOL CONSTRUCTION PLANS FOR
GOULD PARK POOL
ASHFORD AVE & BEACON HILL DR
DOBBS FERRY, NY 10522

JANUARY 2019

WESTCHESTER COUNTY DEPARTMENT OF HEALTH

INDEX OF DRAWINGS

SHEET NUMBER	DESCRIPTION	DRAWING NUMBER
1	TITLE SHEET WITH INDEX	TS-1
2	SCHEMATIC SITE PLAN	SP-1
3	POOL PLAN & ELEVATION SECTIONS	PL-1
4	POOL SECTIONS & DETAILS	PL-2
5	EQUIPMENT ROOM DETAILS	EQ-1
6	MISCELLANEOUS DETAILS	MD-1
7	MISCELLANEOUS DETAILS	MD-2
8	WALL SECTIONS	WS-1
9	EQUIPMENT ROOM FOUNDATION	EB-1
10	EQUIPMENT ROOM BUILDING	EB-2

DESIGNED BY: ANDREW S. BELL, P.E. NYSPE NO. 055448

AQUATTICA Pools & Water Parks Inc.
518 456-6015
gschult1@nycap.rr.com
Albany, NY 12203

BE Bell Engineering
A.S. BELL ENGINEERING PC
Andrew S. Bell, P.E.
1732 Western Avenue
ALBANY, N.Y. 12203
518-452-2838
asbellengineering@gmail.com

TS-1.dgn

BE # 218-021

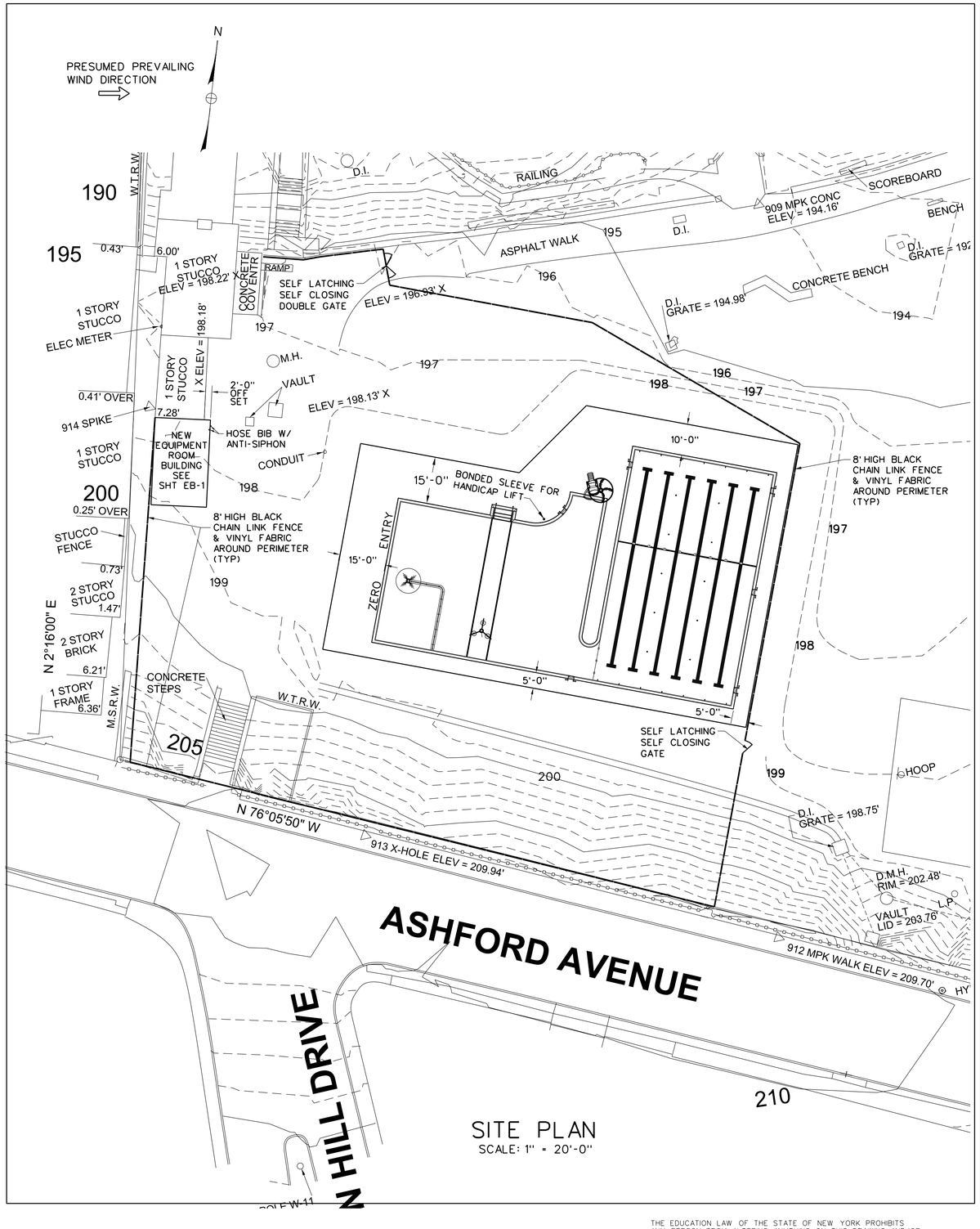

SITE PLAN
SCALE: 1" = 20'-0"

GENERAL NOTES:

1. ALL POOL CONSTRUCTION, EQUIPMENT AND EQUIPMENT INSTALLATION, AS WELL AS OPERATION AND MAINTENANCE OF THE POOL FACILITY SHALL BE IN CONFORMANCE WITH THE NEW YORK STATE SANITARY CODE, SUBPART 6-1, "SWIMMING POOLS" AND THE UNIFORM CODE.
2. POOL SHALL BE CONSTRUCTED OF SHOTCRETE, PROPORTIONED BY THE CONTRACTOR TO PROVIDE A MINIMUM TESTED COMPRESSIVE STRENGTH OF 4,000 PSI AT 28 DAYS. REINFORCING STEEL SHALL BE DEFORMED BAR CONFORMING TO ASTM A615 GRADE 60 AND BE PLACED IN ACCORDANCE WITH THE WALL SECTION SHOWN ON THE PLANS. BARS SHALL BE LAPPED A MINIMUM OF 50 DIAMETERS AT SPLICES AND A MINIMUM OF TWO (2) FEET AT CORNERS.
3. SHOTCRETE SHALL BE PLACED AGAINST FIRM, UNDISTURBED SOIL UNLESS OTHERWISE NOTED. SOIL TEMPERATURE SHALL BE AT LEAST 45 DEGREES F.
4. THE INTERIOR OF THE POOL SHALL SHALL BE COATED WITH MARCITE, FINISHED TO A SMOOTH UNIFORM APPEARANCE.
5. ALL BACKFILLED AREAS ADJACENT TO POOL CONSTRUCTION SHALL BE COMPACTED IN SIX (6") MAXIMUM LIFTS.
6. ALL ELECTRICAL WORK FOR THIS INSTALLATION SHALL CONFORM TO ARTICLE 680 OF THE NATIONAL ELECTRICAL CODE (NEC). ALL ELECTRICAL WORK SHALL BE PERFORMED BY A LICENSED ELECTRICIAN. NO OVERHEAD ELECTRICAL LINES SHALL BE INSTALLED WITHIN TWENTY-FIVE (25') FEET HORIZONTAL DISTANCE OF THE POOL. ALL POOL DECK EQUIPMENT, METAL INSERTS, REINFORCING STEEL AND ANCHORS SHALL BE ELECTRICALLY BONDED BY THE ELECTRICIAN. ALL LIGHTING, EQUIPMENT ROOM, AND OTHER ELECTRICAL CIRCUITS WITHIN THE POOLAREA SHALL BE PROVIED WITH GFI PROTECTION.
7. THE POOL ALARMS ARE REQUIRED PURSUANT TO TITLE 19 (NYCRR), CHAPTER XXXIII, STATE FIRE PREVENTION & BUILDING CODE (UNIFORM CODE), PART 1221, SECTION 1221.3, AND ARE SUBJECT TO APPROVAL BY THE LOCAL MUNICIPAL CODE ENFORCEMENT OFFICIAL. POOL ALARM IS NOT INCLUDED AS PART OF THIS DEPARTMENT OF HEALTH APPROVAL.
8. THE POOL IS NOT DESIGNED FOR NIGHT SWIMMING IN ACCORDANCE WITH SUBPART 6-1.29.7.1 OF THE NEW YORK STATE SANITARY CODE.
9. THE POOL IS DESIGNED IN ACCORDANCE WITH THE 2010 AMERICANS WITH DISABILITIES ACT (ADA) STANDARDS FOR ACCESSIBLE DESIGN FOR SWIMMING POOLS AND SPAS. THE DEPARTMENT OF JUSTICE IS RESPONSIBLE FOR IMPLEMENTATION AND ENFORCEMENT OF THE REGULATIONS. COMPLIANCE WITH THESE STANDARDS IS NOT INCLUDED AS PART OF THE DEPARTMENT OF HEALTH APPROVAL.
10. ELECTRICIAN SHALL PROVIDE ELECTRICAL CERTIFICATE PRIOR TO POOL ACCEPTANCE.
11. ALL POOL PIPING AND FITTINGS SHALL BE SCHEDULE 80 PVC SUITABLE FOR 160 PSI@ 73°F. ALL PIPING INSTALLED AROUND THE EXTERIOR OF THE POOL SHALL BE WELL SUPPORTED AND PROPERLY BACKFILLED TO PREVENT SETTLEMENT BELOW AND AROUND THE PIPE. PIPING SHALL BE BEDDED IN SAND, FINE CRUSHED STONE, OR SELECT FILL APPROVED BY THE ENGINEER. ALL PIPING AND FITTINGS SHALL BE CHECKED FOR LEAKS BEFORE AND AFTER BACKFILLING AND BEFORE CONSTRUCTION OF THE POOL DECK BY PRESSURE TESTING.
12. ALL POOL DECK EQUIPMENT BOLTS, FASTENERS, AND CONNECTORS SHALL BE CHROME OR STAINLESS STEEL UNLESS OTHERWISE NOTED.
13. THIS POOL IS CERTIFIED TO BE STRUCTURALLY STABLE EITHER IN FULL OR EMPTY CONDITION, PROVIDED THAT THE HYDROSTATIC RELIEF VALVES ARE INSTALLED IN ACCORDANCE WITH THE CONTRACT PLANS AND MAINTAINED IN WORKING CONDITIONS.
14. PROVIDE ONE TEST KIT PER NYSDOH 6.1

LIFESAVING EQUIPMENT

LIFESAVING EQUIPMENT SHALL CONSIST OF THE FOLLOWING:

1. A COMMERCIALLY PREPARED 24-UNIT FIRST AID KIT WITH SUPPLY OF BAND AIDS, BANDAGE COMPRESSES, AND SELF ADHERING GAUZE BANDAGES; AND A POCKET FACE MASK OR FACE SHIELD WITH A ONE-WAY VALVE TO ASSIST WITH CPR.
2. A REACHING POLE (OR SHEPHERDS CROOK) AT LEAST FIFTEEN (15) FEET LONG, TWO (2) U.S. COAST GUARD APPROVED RING BUOYS AT LEAST EIGHTEEN (18") INCHES DIAMETER FITTED WITH 1/4" DIA. LINE WITH A LENGTH OF 1.5 TIMES THE MAXIMUM WIDTH OF THE POOL OR FIFTY (50') FEET WHICHEVER IS LESS.

SIGN AND MARKER NOTES:

1. BACKGROUND AND LETTERING TO BE OF CONTRASTING COLORS ON ALL SIGNS AND MARKERS.
2. ALL SIGNS AND MARKERS ARE TO BE PLAINLY VISIBLE TO THE BATHERS USING THE POOL,
3. "NO DIVING" AND "FEET DEEP" MARKERS ARE TO BE OF INLAID TILE SET INTO CONCRETE DECK.
4. DEPTH OF WATER IS TO BE MARKED AT OR ABOVE THE WATER SURFACE AND ON THE EDGE OF THE DECK.
5. MAXIMUM, MINIMUM DEPTHS MUST BE MARKED AND INTERMEDIATE DEPTHS ARE TO BE MARKED AS PER HEALTH DEPARTMENT CODES.
6. ALL SIDES ARE TO BE MARKED SPACED AT NO MORE THAN 25 FEET APART.
7. MARKINGS ARE TO BE ON BOTH SIDES AND BOTH ENDS OF POOL.
8. DEPTHS ARE MEASURED AT A POINT THREE FEET FROM THE WALL AT THE LOCATION OF THE GIVEN DEPTH MARKER.

WARNING SIGNS

WARNING SIGNS OF A MINIMUM SIZE OF 36"x24" SHALL BE POSTED AT EACH POOL ENTRANCE AND ON THE WALL OR FENCE STATING THE FOLLOWING:

1. TWO OR MORE ADULTS, 18 YEARS OR OLDER, MUST BE PRESENT AT THE POOL WHEN THE BATHING FACILITY IS IN USE, WITH AT LEAST ONE ADULT ON THE POOL DECK.
2. CHILDREN LESS THAN 16 YEARS OF AGE MUST BE ACCOMPANIED BY AN ADULT RESPONSIBLE FOR THEIR SAFETY AND BEHAVIOR WHILE AT THE POOL.
3. SHALLOW WATER - NO DIVING.
4. LOCATION OF FREE TELEPHONE AND EMERGENCY PHONE NUMBER (911).
5. MAXIMUM NUMBER OF BATHERS USING THE POOL IS 397
6. HOURS OF OPERATION _____ TO _____
7. USE OF THE POOL AT ANY OTHER TIMES IS PROHIBITED.
8. NO NIGHT SWIMMING.

PIPING NOTES:

1. PIPING IS TO BE PITCHED IN SUCH A MANNER SO AS TO ALLOW FOR THE COMPLETE DRAINING OF THE PIPING FOR PROPER WINTERIZATION. PIPE CAN DRAIN INTO THE POOL OR ALL LINES MUST BE MECHANICALLY BLOWN OUT FOR PROPER WINTERIZATION

POLLUTION SIGNS

SIGN SHALL BE POSTED STATING:
"POLLUTION OF SWIMMING POOL PROHIBITED, URINATION, DISCHARGE OF FECAL MATTER, EXPECTORATING OR BLOWING THE NOSE IN ANY SWIMMING POOL PROHIBITED"
NO GLASS CONTAINERS OR SHARP OBJECTS ALLOWED IN POOL AREA.

AQUATTICA
518 456-6015
gschult1@mycap.rr.com
Pools & Water Parks Inc.
Albany, NY 12203

THE EDUCATION LAW OF THE STATE OF NEW YORK PROHIBITS ANY PERSON FROM ALTERING ANYTHING ON THIS DRAWING AND/OR THE ACCOMPANYING SPECIFICATION, UNLESS IT IS UNDER THE DIRECTION OF A LICENSED PROFESSIONAL ENGINEER. WHERE SUCH ALTERATIONS ARE MADE, THE PROFESSIONAL ENGINEER MUST SIGN, SEAL, DATE AND DESCRIBE THE FULL EXTENT OF THE ALTERATIONON THE DRAWING AND/OR IN THE SPECIFICATION.

THE PLANS AND SPECIFICATIONS HEREIN ARE INTENDED FOR THE SUBJECT PROJECT ONLY AS A RESULT OF CONTRACTUAL NEGOTIATIONS BETWEEN THE OWNER AND A.S.BELL ENGINEERING, PC. PLANS AND SPECIFICATIONS WILL BE SUBJECT OF A COPYRIGHT PETITION AND MAY NOT BE REVISED OR REUSED BY ANYONE WITHOUT THE WRITTEN AUTHORITY OF A.S.BELL ENGINEERING PC.

LICENSED PROFESSIONAL ENGINEER ANDREW S. BELL 055448 STATE OF NEW YORK

BELL ENGINEERING
A S BELL ENGINEERING, PC
Andrew S. Bell, P.E.
BE
1732 WESTERN AVENUE
ALBANY, N.Y. 12203
(518) 452-2838
asbellengineering@gmail.com

GOULD PARK
ASHFORD AVE & BEACON HILL DR
DOBBS FERRY, NY 10522

SITE PLAN

DRAWING NO.	SCALE:	DATE:	SHEET NO.
SP-1	AS SHOWN	JANUARY 2019	2 OF 10

BE # 218-021

PL-1.dgn

PERIMETER OVERFLOW AND RECIRCULATION SYSTEM

NO.	QTY.	CAT. NO.	DESCRIPTION
1	±363'	R300	STRAIGHT R300 TUBE & GUTTER RECIRC. SYSTEM, TYPE 316L ST. ST.
1A	±55'	R300	CURVED R300 TUBE & GUTTER RECIRC. SYSTEM, TYPE 316L ST. ST.
1B	±8'	R300	RAISED GRATE STEP COVER
2	2	-	8" PERIMETER OVERFLOW CONVERTER
3	1	-	8" FILTERED WATER RETURN CONVERTER
4	16	9215	AUTOMATIC INTEGRAL FLOW SURGE WEIR
5	14	9018	JET FLOW GUTTER WASH FITTING
6	4	2424ESMD-FC-12	24 X 24 ENTRAPMENT SAFE DRAIN WITH V.G.B. CERTIFIED FLAT COVER, 12" FLANGED CONNECTION
7	4	8703-S	COMMERCIAL HYDROSTATIC RELIEF VALVE

FILTRATION EQUIPMENT

NO.	QTY.	CAT. NO.	DESCRIPTION
8A	1	PPEC-500S	519.4 SQ FT. 39.5" DIAMETER STAINLESS STEEL REGENERATIVE D.E. PRESSURE FILTER
✳ 8B	1	e-530SC 4-9SC	MARLOW FLOODED SUCTION PUMP & MOTOR, MODEL 530SC 4-9SC, 20 H.P., RATED FOR 750 GPM @ 70' TDH, 120/240V, 1 PHASE, 60 CYCLE, 1750 RPM
8C	1	5708-05	PADDOCK 8"X5" ROUND STAINLESS STEEL STRAINER WITH EXTRA BASKET

CHLORINATION EQUIPMENT

NO.	QTY.	CAT. NO.	DESCRIPTION
9	1	3140AT	PPG CHLORINATOR, BALANCE TANK, BASE & STAND
10	1	2500	ACID-RITE FEEDER 20 AMP
11	1	U-200-6E	AQUIONICS UV TREATMENT SYSTEM 6" TOP-IN, 6" TOP-OUT, 5.5kW
12	1	PC2100	PADDOCK WATER CHEMISTRY CONTROLLER
13	1	K-2006C	TAYLOR COMMERCIAL TEST SET FAS-DPD FREE CHLORINE TYPE (NOT SHOWN)

MAINTENANCE EQUIPMENT

NO.	QTY.	CAT. NO.	DESCRIPTION
14	1	3348	PADDOCK LEAF SKIMMER (NOT SHOWN)
15	1	3330	WALL BRUSH & HOLDER (NOT SHOWN)
16	1	3367	TELESCOPIC HANDLE, ADJUSTMENT 8' TO 16' (NOT SHOWN)
17	1	3163	VACUUM CLEANER SET W/PORTABLE PUMP MODEL 3180-E (NOT SHOWN)

DECK EQUIPMENT

NO.	QTY.	CAT. NO.	DESCRIPTION
18	6	4497-C	CALIFORNIA TYPE 1.9" O.D., 316L ST.ST. GRAB RAIL SET
19	22	4501-3	ST. ST. RECESSED STEPS
20	42	4837	ST. ST. ESCUTCHEONS FOR 1.9" O.D. RAIL
21	36	4801	BRONZE WEDGE DECK ANCHORS FOR 1.9" O.D. RAIL
22	2	4718	3 BEND STAINLESS STEEL HANDRAIL, 1.9"O.D.x38"Hx48"LG (1 RAIL, 2 POST)
23	1	4718	304L SS WALL RAIL ±32'-0"LG. x 11"H., 1.9" O.D., 1 RAIL, 8 POSTS

SAFETY EQUIPMENT

NO.	QTY.	CAT. NO.	DESCRIPTION
24	3	4707-6	6 FT MOVABLE STAINLESS STEEL LIFEGUARD CHAIR
25	3	4723	LIFE HOOK WITH 16'-0" HANDLE
26	3	350	24" LIFE RESCUE TUBES, 50FT -1/4" THROW ROPE
27	55'	4747	3/4" POLYETHLENE ROPE (1 @ 62', 1 @ 12')
28	4	4774	3/4" ROPE HOOK TERMINAL
29	4	-	RECESSED ST. ST. LIFELINE ANCHOR (3-9026, 1-9026-C)
30	11	4778	5" X 9" LIFELINE FLOATS

RACING EQUIPMENT

NO.	QTY.	CAT. NO.	DESCRIPTION
31	6 SETS	4909-A	ANCHOR ONLY FOR EZ SET II STARTING PLATFORM
32	4	ANCHOR	ANCHOR ONLY FOR 316L SS BACKSTROKE MARKER POST
33	2	ANCHOR	ANCHOR ONLY FOR 316L SS RECALL MARKER POST
34	14	9026	STAINLESS STEEL RECESSED RACING LINE CUP ANCHOR

MISCELLANEOUS EQUIPMENT

NO.	QTY.	CAT. NO.	DESCRIPTION
35	1	6610	AUTOMATIC WATER LEVEL CONTROLLER IN RELAY BOX (EQ-1)
36	1	6610	AUTOMATIC WATER LEVEL CONTROLLER IN PROBE CONTAINER (PL-1)
37	1	-	PRESSURE GAUGE
38	1	-	COMPOUND GAUGE
39	1	9767029	WIKA 2 1/2"DIAL, 30hg-0-60 PSI, LIQUID FILLED, 1/4" NPT, COMPOUND GA.
40	3	2551	SIGNET 2551 W/ 9000 TRANSMITTER
41	1	TBKT-005-OM	TUMBLE BUCKETS - WITH OMNIPOD
42	1	FHYD-004-OM	RAIN-DROP FIRE HYDRANT SPRAY - WITH OMNIPOD
43	8	-	UP-STREAM JET FITTINGS (30 GPM EACH)
44	11	SP-1425S	HAYWARD ADJUSTABLE FLOOR INLET FITTING 1 1/2"SKT. X 2" MIP
45	1	695-209-43	VORTEX CLOSED FLUME SLIDE WITH STAIRCASE, BLUE
46	1	-	12"WIDE STAINLESS STEEL GUTTER COVER AT ACTIVITY WALL
47	1	-	8" ST.ST. ANTI-VORTEX PLATE
48	1	FV-DP-XWB	12" MER-MADE VERTICAL FLOAT VALVE W/ 12" FLOATS
49	1	-	3FT ST.ST. LONG HANDLED VALVE KEY
50	1	-	5'-10" x 8' x 1'-10" THICK FIBERGLASS BALANCE TANK GRATE
51	1	Z1000	YASKAWA VARIABLE FREQUENCY DRIVE
52	1	BP350	SPECTRUM AQUATICS MOTION TREK 350 HANDI-CAP LIFT

✳ VOLTAGE AND PHASE TO BE COORDINATED WITH OWNER

GENERAL NOTES:

1. ⬡ DENOTES EQUIPMENT LIST NUMBER.
2. ALL BURIED PIPING BETWEEN POOL AND FILTER TO BE NSF APPROVED SCHEDULE 80 PVC FITTINGS, PRIOR TO BEING COVERED BY EARTH, PIPING TO BE PRESSURE TESTED.
3. ALL PIPING IN FILTER ROOM TO BE PERMANENTLY MARKED WITH DIRECTIONAL ARROWS & LABELED. ALL VALVES TO BE TAGGED & LABELED.
4. ALL PIPING TO BE SLOPED TO DRAIN INTO EQUIPMENT ROOM FOR WINTERIZATION

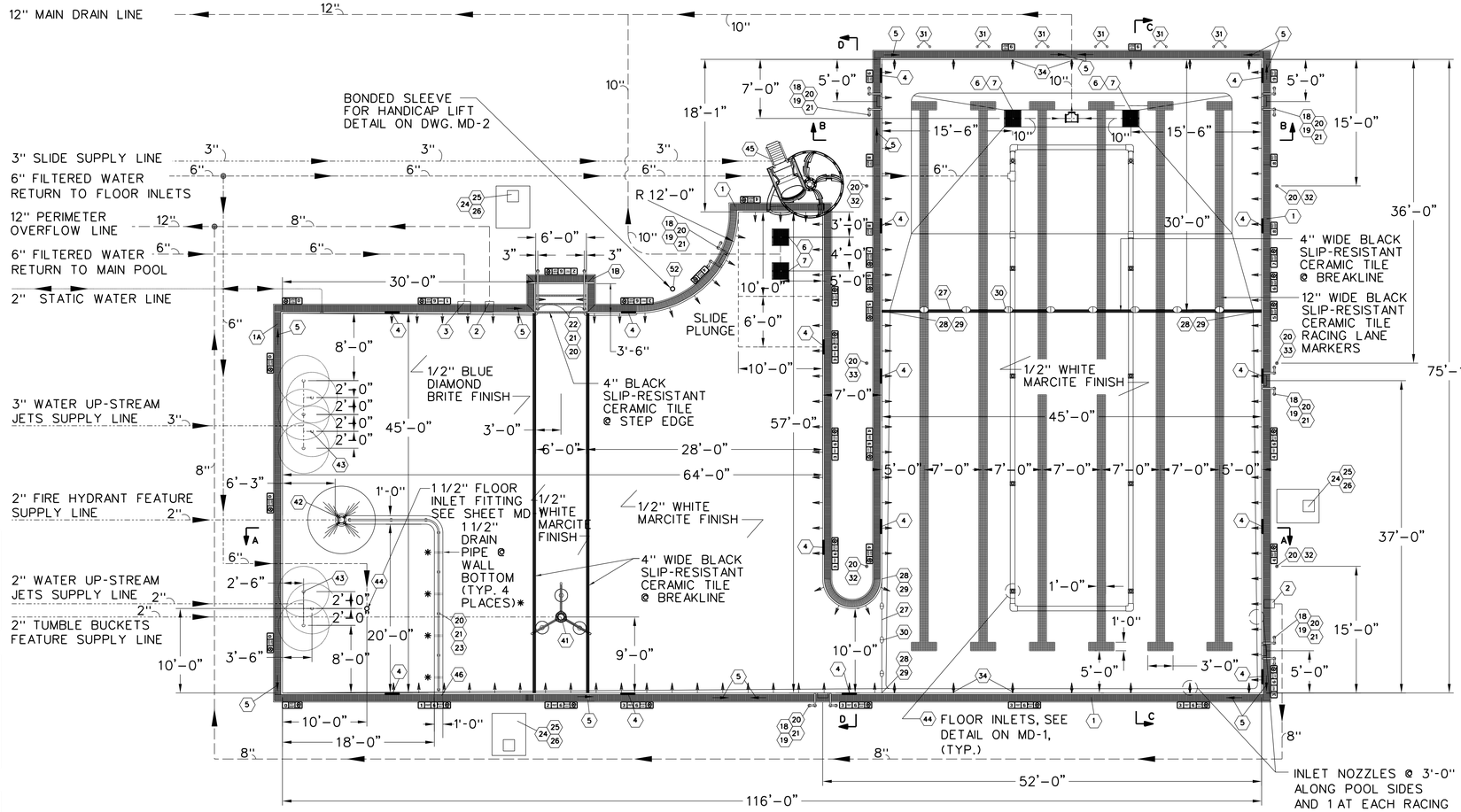

POOL PLAN

SCALE: 1/8" = 1'-=0"

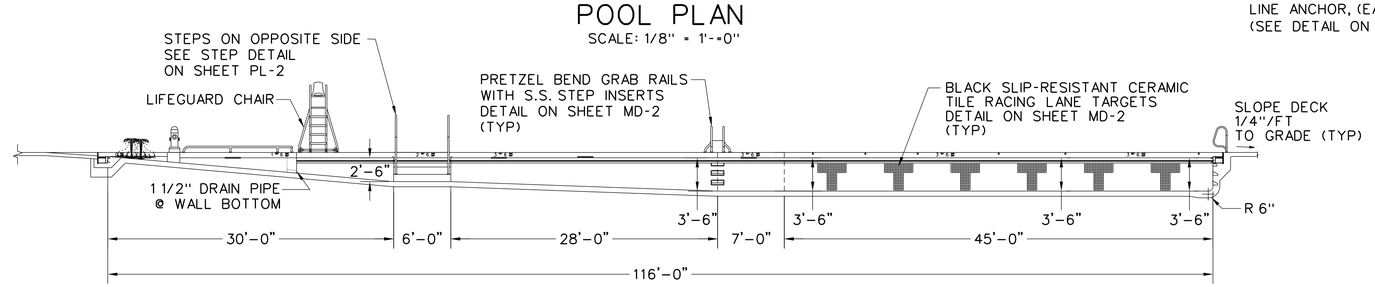

TRANSVERSE SHALLOW POOL SECTION "A-A"

SCALE: 1/8"=1'-0"

POOL DATA:

1	POOL PERIMETER = 475'-0"
2	TOTAL POOL SURFACE AREA = 6,506 SQ.FT.
3	TOTAL POOL CAPACITY = 194,880 GALS
4	ACTIVITY AREA = 3,127 SQ.FT.
5	ACTIVITY AREA CAPACITY = 55,211 GALS
6	ACTIVITY AREA FLOW RATE FOR <3.4 HR. TURNOVER = 270 GPM
7	LAP AREA = 3,379 SQ.FT.
8	LAP AREA CAPACITY = 139,589 GALS
9	LAP AREA FLOW RATE FOR <5 HR. TURNOVER = 480 GPM
10	TOTAL FLOW RATE = 750 GPM
11	FILTER AREA = 54.30 SQ.FT.
12	FILTER RATE PER SQ.FT OF FILTER AREA = 13.81 GPM
13	USER LOADING = (343) SHALLOW, (54) DEEP, TOTAL (397)

THE EDUCATION LAW OF THE STATE OF NEW YORK PROHIBITS ANY PERSON FROM ALTERING ANYTHING ON THIS DRAWING AND/OR THE ACCOMPANYING SPECIFICATION, UNLESS IT IS UNDER THE DIRECTION OF A LICENSED PROFESSIONAL ENGINEER. WHERE SUCH ALTERATIONS ARE MADE, THE PROFESSIONAL ENGINEER MUST SIGN, SEAL, DATE AND DESCRIBE THE FULL EXTENT OF THE ALTERATIONON THE DRAWING AND/OR IN THE SPECIFICATION.

THE PLANS AND SPECIFICATIONS HEREIN ARE INTENDED FOR THE SUBJECT PROJECT ONLY AS A RESULT OF CONTRACTUAL NEGOTIATIONS BETWEEN THE OWNER AND A.S.BELL ENGINEERING, PC. PLANS AND SPECIFICATIONS WILL BE SUBJECT OF A COPYRIGHT PETITION AND MAY NOT BE REVISED OR REUSED BY ANYONE WITHOUT THE WRITTEN AUTHORITY OF A.S.BELL ENGINEERING PC.

LICENSED PROFESSIONAL ENGINEER ANDREW S. BELL 055448 STATE OF NEW YORK

AQUATTICA Pools & Water Parks Inc.
518 456-6015 gschult1@nycap.rr.com Albany, NY 12203

BELL ENGINEERING
A S BELL ENGINEERING, PC
Andrew S. Bell, P.E.
BE
1732 WESTERN AVENUE
ALBANY, N.Y. 12203
(518) 452-2838
asbellengineering@gmail.com

GOULD PARK
ASHFORD AVE & BEACON HILL DR
DOBBS FERRY, NY 10522

POOL PLAN & SECTIONS

DRAWING NO.	SCALE:	DATE:	SHEET NO.
PL-1	AS SHOWN	JANUARY 2019	3 OF 10

BE # 218-021

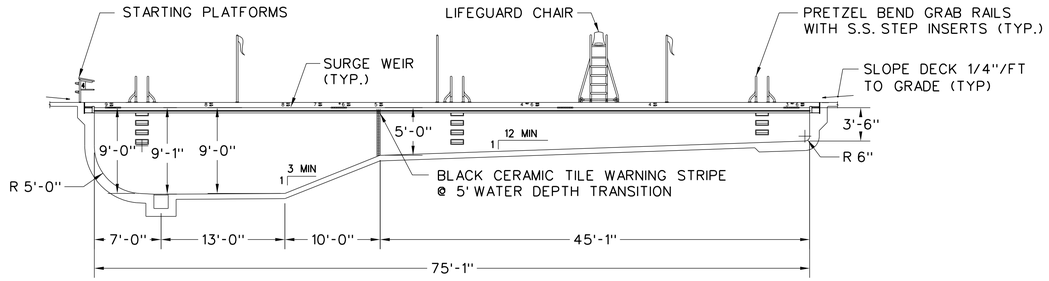

LONGITUDINAL LAP POOL SECTION "C-C"

SCALE: 1/8"=1'-0"

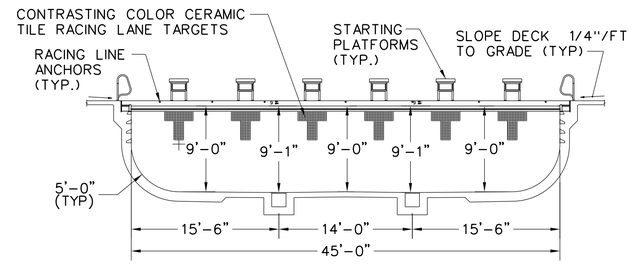

TRANSVERSE DEEP POOL SECTION "B-B"

SCALE: 1/8" = 1'-0"

DEPTH MARKER SCHEDULE

QTY	DEPTH	QTY	DEPTH
5	0 FEET DEEP (NO DIVING)	2	5 FEET DEEP (NO DIVING)
2	1 FEET 6 INCHES DEEP (NO DIVING)	2	6 FEET DEEP
2	2 FEET 6 INCHES DEEP (NO DIVING)	2	7 FEET DEEP
9	3 FEET 6 INCHES DEEP (NO DIVING)	4	8 FEET DEEP
4	4 FEET DEEP (NO DIVING)	4	9 FEET DEEP
2	4 FEET 6 INCHES DEEP (NO DIVING)		

DEPTH MARKERS @ DECK

N.T.S.

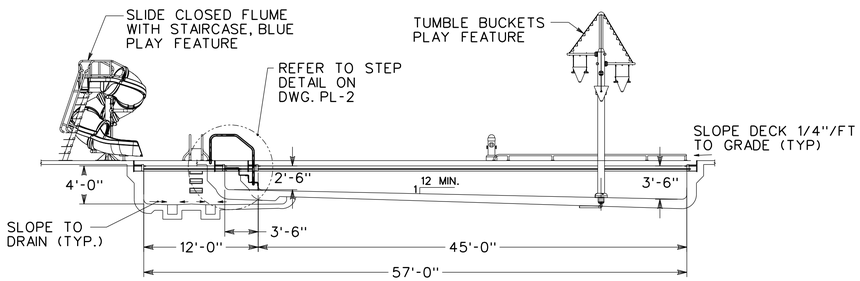

LONGITUDINAL ACTIVITY SECTION "D-D"

SCALE: 1/8"= 1'-0"

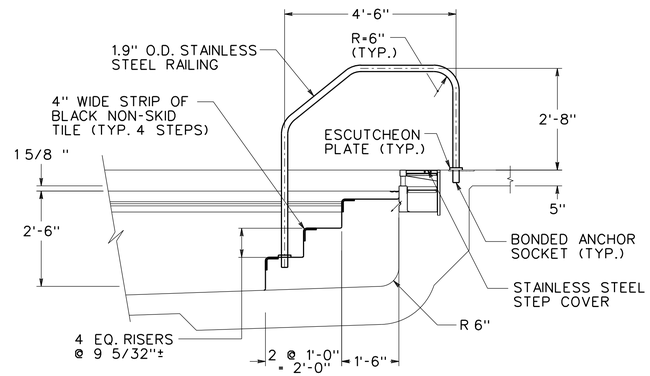

STEP DETAIL

SCALE: 1/2" = 1'-0"

NUMBERS TO BE MIN. OF 4" HIGH

BLACK NUMBERS AND LETTERS ON WHITE 6" x 6" TILE

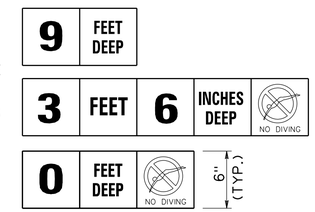

DEPTH MARKERS

TILE DETAILS

SCALE: 1 1/2" = 1'-0"

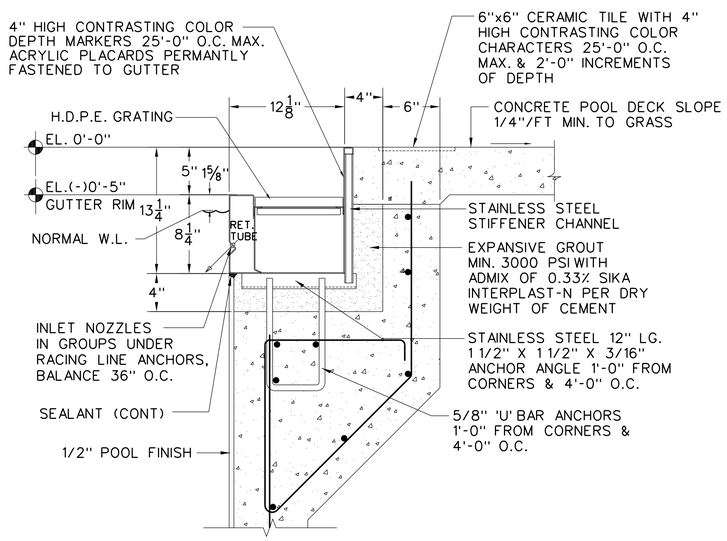

TYPICAL GUTTER SECTION - R300

SCALE: 1 1/2" = 1'-0"

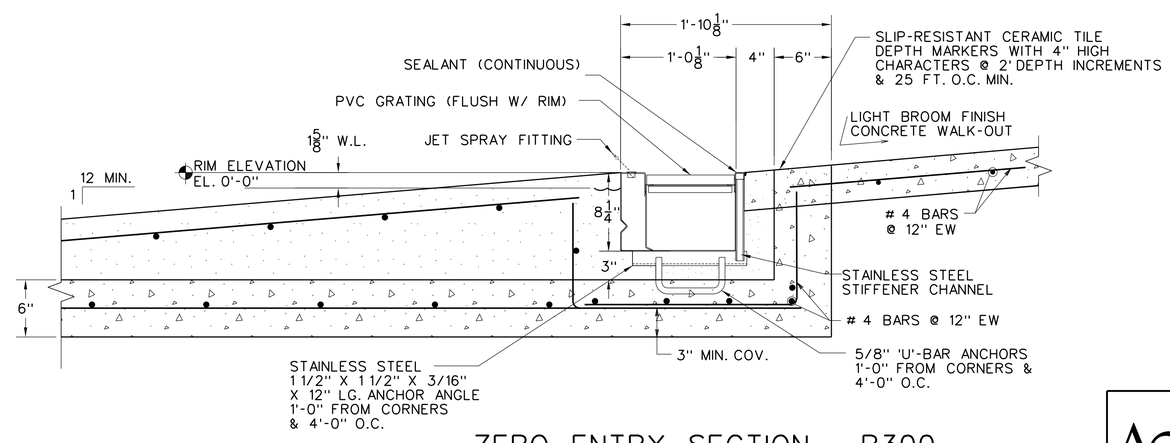

ZERO ENTRY SECTION - R300

SCALE: 1 1/2" = 1'-0"

THE EDUCATION LAW OF THE STATE OF NEW YORK PROHIBITS ANY PERSON FROM ALTERING ANYTHING ON THIS DRAWING AND/OR THE ACCOMPANYING SPECIFICATION, UNLESS IT IS UNDER THE DIRECTION OF A LICENSED PROFESSIONAL ENGINEER. WHERE SUCH ALTERATIONS ARE MADE, THE PROFESSIONAL ENGINEER MUST SIGN, SEAL, DATE AND DESCRIBE THE FULL EXTENT OF THE ALTERATIONON THE DRAWING AND/OR IN THE SPECIFICATION.

THE PLANS AND SPECIFICATIONS HEREIN ARE INTENDED FOR THE SUBJECT PROJECT ONLY AS A RESULT OF CONTRACTUAL NEGOTIATIONS BETWEEN THE OWNER AND A.S.BELL ENGINEERING, PC. PLANS AND SPECIFICATIONS WILL BE SUBJECT OF A COPYRIGHT PETITION AND MAY NOT BE REVISED OR REUSED BY ANYONE WITHOUT THE WRITTEN AUTHORITY OF A.S.BELL ENGINEERING PC.

LICENSED PROFESSIONAL ENGINEER ANDREW S. BELL 055448 STATE OF NEW YORK

BELL ENGINEERING
A S BELL ENGINEERING, PC
Andrew S. Bell, P.E.
BE
1732 WESTERN AVENUE
ALBANY, N.Y. 12203
(518) 452-2838
asbellengineering@gmail.com

AQUATTICA
518 456-6015
gschult1@nycap.rr.com
Pools & Water Parks Inc.
Albany, NY 12203

GOULD PARK
ASHFORD AVE & BEACON HILL DR
DOBBS FERRY, NY 10522

SECTIONS AND DETAILS

DRAWING NO.	SCALE:	DATE:	SHEET NO.
PL-2	AS SHOWN	JANUARY 2019	4 OF 10

BE # 218-021

⬡ ELECTRICAL REQUIREMENTS - MAIN LAP POOL

NO.	QTY.	EQUIPMENT	POWER	NOTES (WORK BY ELECTRICAL CONTRACTOR)
8A	1	POOL REGENERATIVE D.E. PRESSURE FILTER MODEL PPEC-500S	115V, 1 PHASE, 60 CYCLE	RUN POWER TO FILTER CONTROLLER RUN CONTROL WIRES TO U.V. LIGHT, CHEMICAL CONTROLLER & VFD PANEL. PROVIDE RELAYS AS NECESSARY.
✳ 8B	1	POOL RECIRCULATING PUMP 20 H.P. MARLOW PUMP MODEL e-530SC-4-9SC	120/240, 1 PHASE, 60 CYCLE, 1750 RPM	RUN POWER TO VFD PANEL WIRE PANEL TO MOTOR
9	1	POOL SANITIZER CHLORINE ACCU-TAB MODEL 3140AT, 1-1/2 H.P. PUMP	120V, 1 PHASE, 60 CYCLE 20AMP DEDICATED CIRCUIT	CONTROL BY WATER CHEMISTRY CONTROLLER
10	1	ACID-RITE FEEDER 20AMP MODEL 2500	120V, 1 PHASE, 60 CYCLE 20AMP DEDICATED CIRCUIT	CONTROLLED BY WATER CHEMISTRY CONTROLLER
11	1	AQUONICS UV TREATMENT SYSTEM 6", 5.5 kW, MODEL U-200-6E	240V, 1 PHASE, 60 CYCLE	WIRE TO 30 AMP DEDICATED BREAKER
12	1	CHEMTROL PROGRAMMABLE CONTROLLER MODEL PC2100	PROVIDE 110V OUTLET W/GFI 15A	POWER SOURCE INTERLOCKED TO MAIN RECIRCULATION PUMP
35	1	MODEL 6610, AUTOMATIC WATER LEVEL CONTROLLER IN RELAY BOX	120V, 1 PHASE, 60 CYCLE, 15AMP	RUN POWER TO RELAY, WIRE TO SOLENOID VALVES AND PROBE CONTAINER
36	1	MODEL 6610, AUTOMATIC WATER LEVEL CONTROLLER PROBE CONTAINER	120V, 1 PHASE, 60 CYCLE, 15AMP	WIRE TO RELAY
40	3	SIGNET FLOWMETER AND TRANSMITTER MODEL 2551 AND 9900	120V, 1 PHASE, 60 CYCLE 15A TRANSFORMER TO 24VDC	RUN 24VDC POWER TO FLOWMETERS AND VFD
51	1	VARIABLE FREQUENCY DRIVE YASKAWA MODEL Z1000	15 H.P. FILTER PUMP MOTOR START	RUN POWER TO VFD WIRE VFD TO PUMP MOTOR

✳ VOLTAGE AND PHASE TO BE COORDINATED WITH OWNER

COLOR CODING:

ALL EXPOSED PIPING SHOULD BE COLOR CODED IN ACCORDANCE WITH THE NEW YORK SANITARY CODE SUBPART 6-1, SUBSECTION 6-1.29.9.4 AS FOLLOWS:

PIPING	COLOR CODE
WATER LINES	
POTABLE	DARK BLUE
RECIRCULATION	
FILTERED	AQUA
PERIMETER OVERFLOW	OLIVE GREEN
MAIN DRAIN	BLACK
CHEMICAL LINES	
CHLORINE SOLUTION	YELLOW
ACID OR CO2	PINK
WASTE LINES	
BACKWASH WASTE	DARK BROWN
SEWER (SANITARY OR OTHER)	DARK GRAY
DECK DRAINS	LIGHT BROWN

THE NAME OF THE LIQUID AND ARROWS, INDICATING DIRECTION OF THE FLOW, TO BE PAINTED ON PIPE.

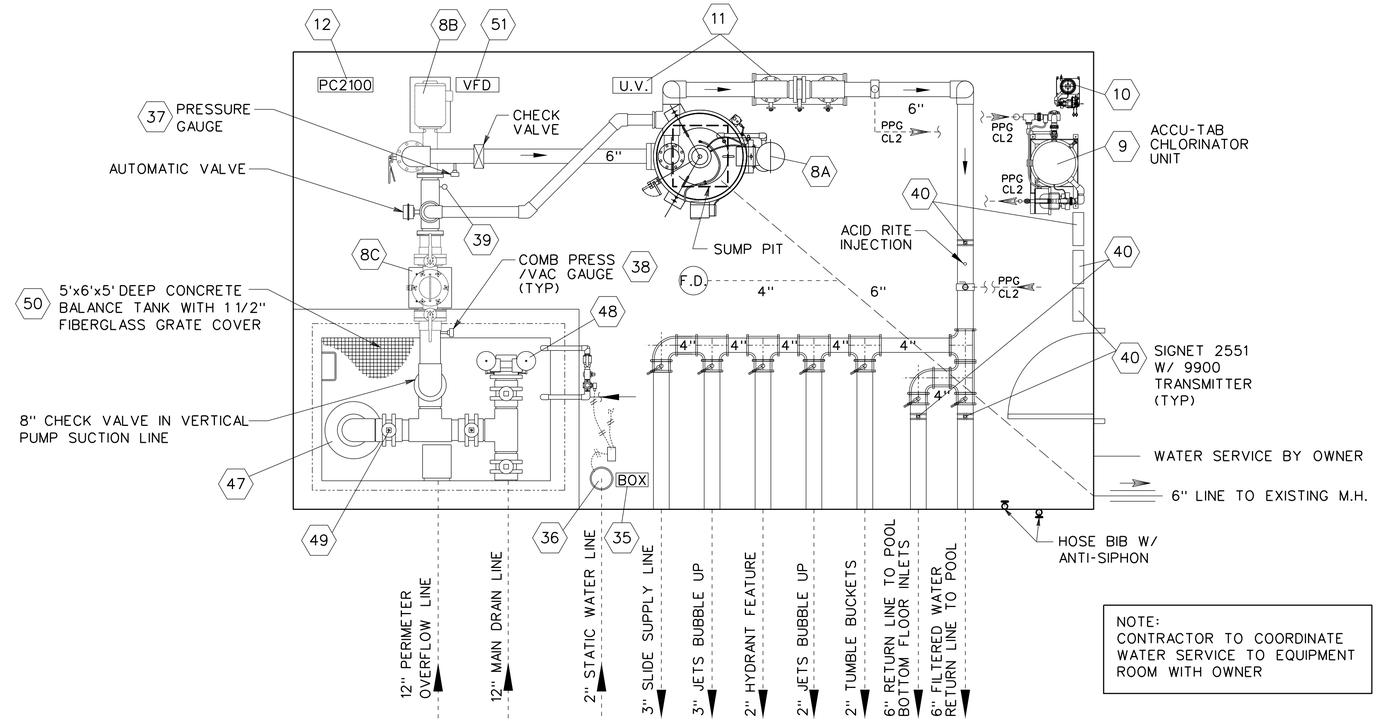

NOTE:
CONTRACTOR TO COORDINATE WATER SERVICE TO EQUIPMENT ROOM WITH OWNER

EQUIPMENT ROOM
SCALE: 3/8"=1'-0"

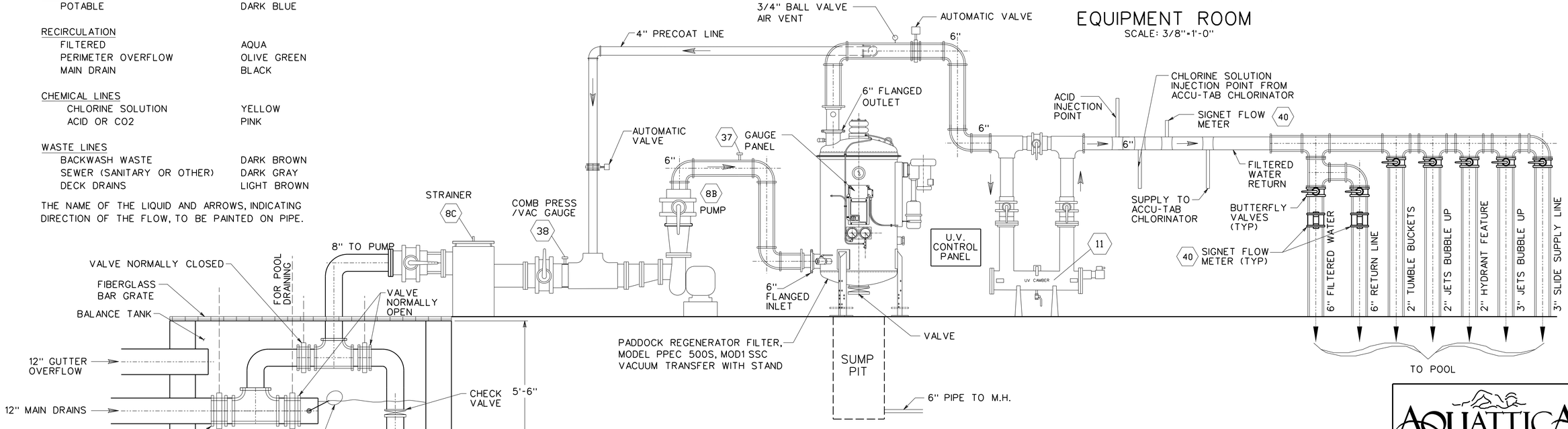

FILTER AND EQUIPMENT SCHEMATIC ELEVATION
NTS

THE EDUCATION LAW OF THE STATE OF NEW YORK PROHIBITS ANY PERSON FROM ALTERING ANYTHING ON THIS DRAWING AND/OR THE ACCOMPANYING SPECIFICATION, UNLESS IT IS UNDER THE DIRECTION OF A LICENSED PROFESSIONAL ENGINEER. WHERE SUCH ALTERATIONS ARE MADE, THE PROFESSIONAL ENGINEER MUST SIGN, SEAL, DATE AND DESCRIBE THE FULL EXTENT OF THE ALTERATIONON THE DRAWING AND/OR IN THE SPECIFICATION.

THE PLANS AND SPECIFICATIONS HEREIN ARE INTENDED FOR THE SUBJECT PROJECT ONLY AS A RESULT OF CONTRACTUAL NEGOTIATIONS BETWEEN THE OWNER AND A.S.BELL ENGINEERING, PC. PLANS AND SPECIFICATIONS WILL BE SUBJECT OF A COPYRIGHT PETITION AND MAY NOT BE REVISED OR REUSED BY ANYONE WITHOUT THE WRITTEN AUTHORITY OF A.S.BELL ENGINEERING PC.

LICENSED PROFESSIONAL ENGINEER ANDREW S. BELL 065448 STATE OF NEW YORK

BELL ENGINEERING
A S BELL ENGINEERING, PC
Andrew S. Bell, P.E.
BE
1732 WESTERN AVENUE
ALBANY, N.Y. 12203
(518) 452-2838
asbellengineering@gmail.com

AQUATTICA
518 456-6015
gschultl1@nycap.rr.com
Pools & Water Parks Inc.
Albany, NY 12203

GOULD PARK
ASHFORD AVE & BEACON HILL DR
DOBBS FERRY, NY 10522

EQUIPMENT ROOM

DRAWING NO.	SCALE:	DATE:	SHEET NO.
EQ-1	AS SHOWN	JANUARY 2019	5 OF 10

BE # 218-021

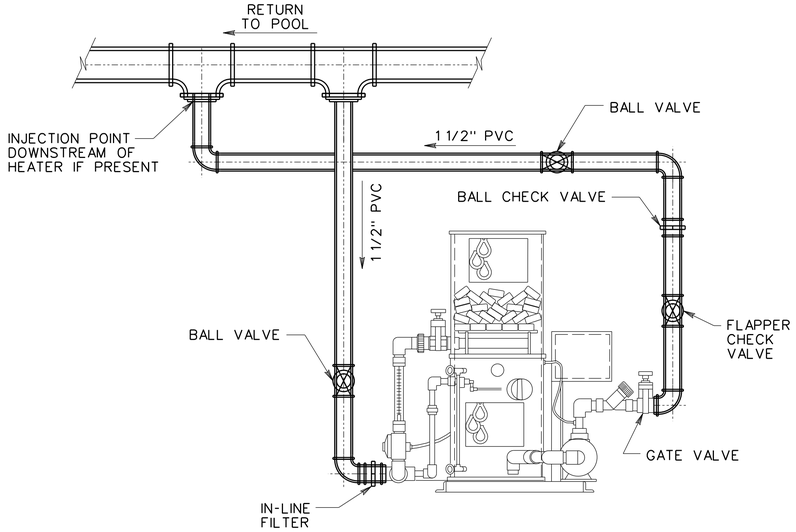

ACCU-TAB CHLORINATION UNIT

SCALE: 1" = 1'-0"

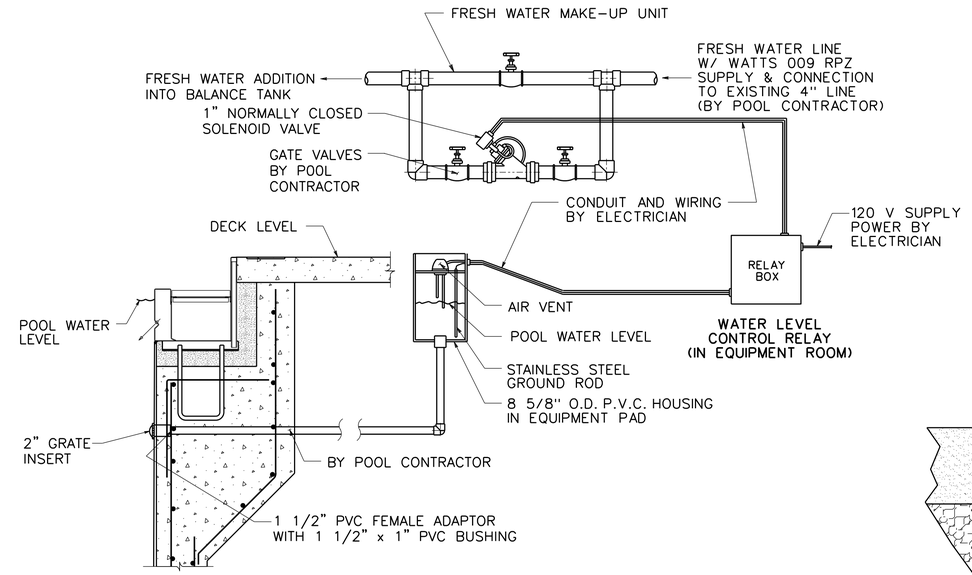

AUTOMATIC WATER LEVEL CONTROL SCHEMATIC

SCALE: 1" = 1'-0"

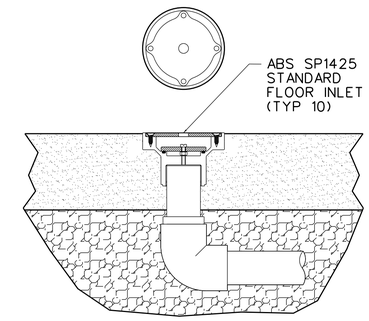

FLOOR INLET DETAIL

SCALE: 3" = 1'-0"

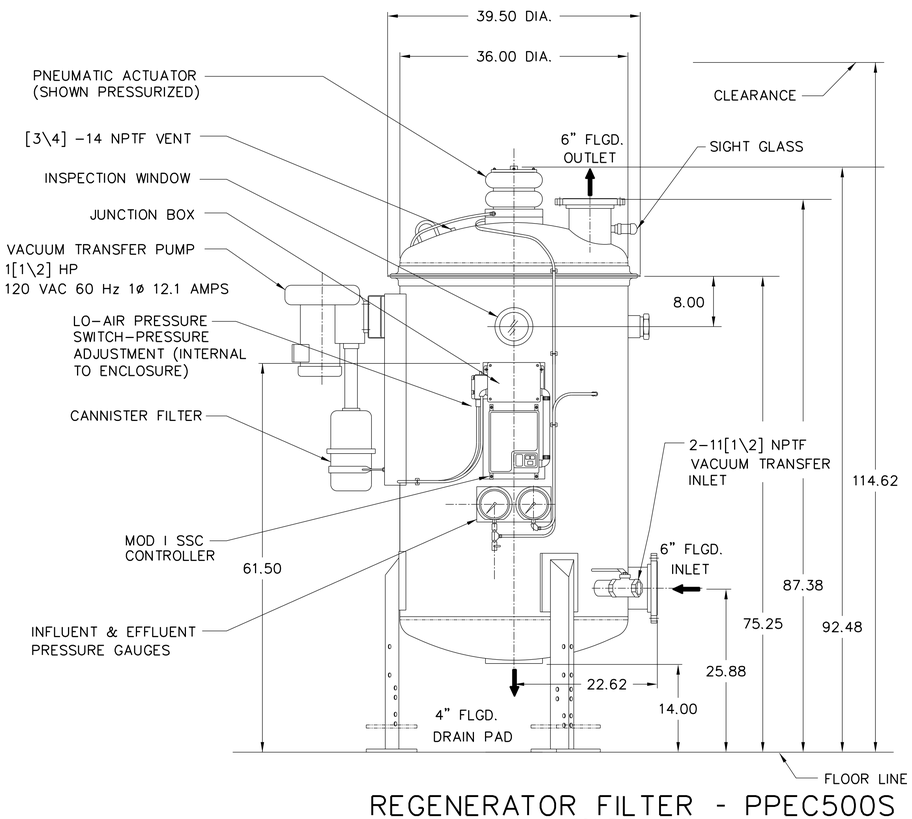

REGENERATOR FILTER - PPEC500S

SCALE: 1" = 1'-0"

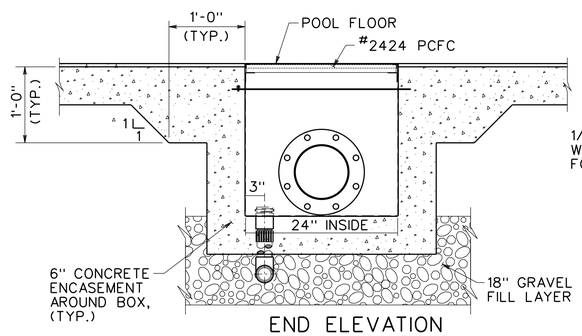

END ELEVATION SUCTION OUTLET FITTING

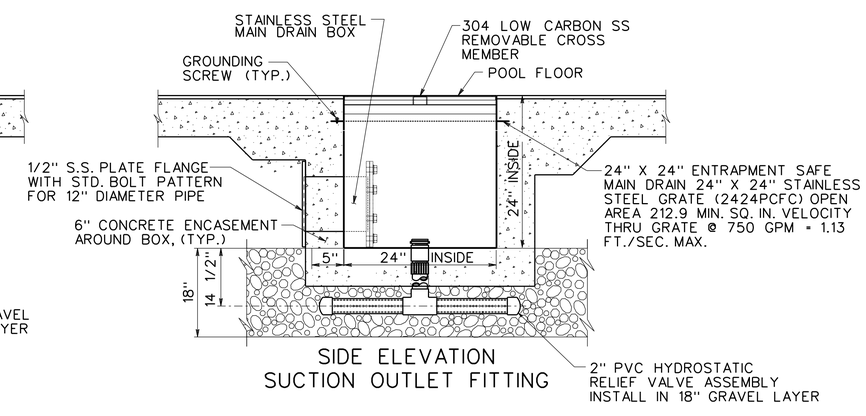

SIDE ELEVATION SUCTION OUTLET FITTING

VGB 2008

NOTES:

1. THE NSF SAFETY FLOW IS THE MAXIMUM FLOW MEETING ASME A112.19.8A 2008 REQUIREMENT. THE MAXIMUM RECOMMENDED DESIGN FLOW IS BASED ON A VELOCITY NOT EXCEEDING 1.5 FPS.
2. ALL SUCTION OUTLET FITTINGS (MAIN DRAIN SUMPS) AND COVERS (GRATES) AND ACCESSORIES MUST COMPLY WITH ASME / ANSI A112.19.8A 2008 VGB PERFORMANCE STANDARDS.

MAIN DRAIN

SCALE: 1" = 1'-0"

THE EDUCATION LAW OF THE STATE OF NEW YORK PROHIBITS ANY PERSON FROM ALTERING ANYTHING ON THIS DRAWING AND/OR THE ACCOMPANYING SPECIFICATION, UNLESS IT IS UNDER THE DIRECTION OF A LICENSED PROFESSIONAL ENGINEER. WHERE SUCH ALTERATIONS ARE MADE, THE PROFESSIONAL ENGINEER MUST SIGN, SEAL, DATE AND DESCRIBE THE FULL EXTENT OF THE ALTERATIONON THE DRAWING AND/OR IN THE SPECIFICATION.

THE PLANS AND SPECIFICATIONS HEREIN ARE INTENDED FOR THE SUBJECT PROJECT ONLY AS A RESULT OF CONTRACTUAL NEGOTIATIONS BETWEEN THE OWNER AND A.S.BELL ENGINEERING, PC. PLANS AND SPECIFICATIONS WILL BE SUBJECT OF A COPYRIGHT PETITION AND MAY NOT BE REVISED OR REUSED BY ANYONE WITHOUT THE WRITTEN AUTHORITY OF A.S.BELL ENGINEERING PC.

LICENSED PROFESSIONAL ENGINEER ANDREW S. BELL 055449 STATE OF NEW YORK

BELL ENGINEERING
A S BELL ENGINEERING, PC
Andrew S. Bell, P.E.
BE
1732 WESTERN AVENUE
ALBANY, N.Y. 12203
(518) 452-2838
asbellengineering@gmail.com

AQUATTICA
518 456-6015
gschult1@nycap.rr.com
Pools & Water Parks Inc.
Albany, NY 12203

GOULD PARK
ASHFORD AVE & BEACON HILL DR
DOBBS FERRY, NY 10522

MISCELLANEOUS DETAILS

DRAWING NO.	SCALE:	DATE:	SHEET NO.
MD-1	AS SHOWN	JANUARY 2019	6 OF 10

BE # 218-021

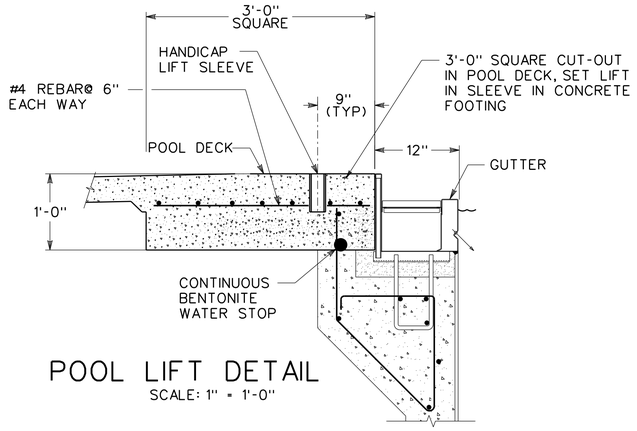

POOL LIFT DETAIL
SCALE: 1" = 1'-0"

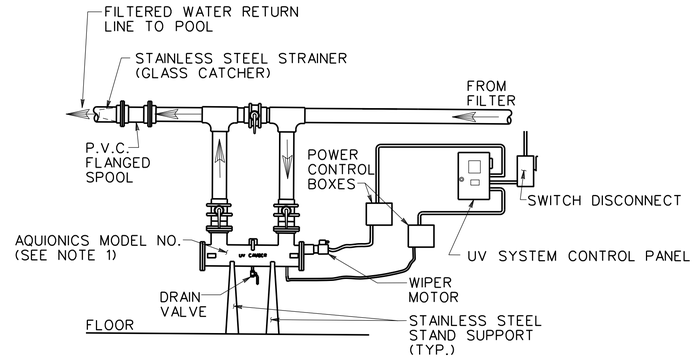

UV LIGHT CHAMBER SCHEMATIC DETAIL
N.T.S.

NOTES:

1. AQUIONICS MODEL NO. U-200-6E TREATMENT SYSTEM 6" TOP-IN, 6" TOP-OUT WITH STRAINER BASKET.
2. ALL PIPING SHOWN IS 6" P.V.C.
3. ALL VALVES SHOWN ARE BUTTERFLY VALVES 6"
4. WIRING DIAGRAM TO BE PROVIDED BY UV LIGHT MANUFACTURER.

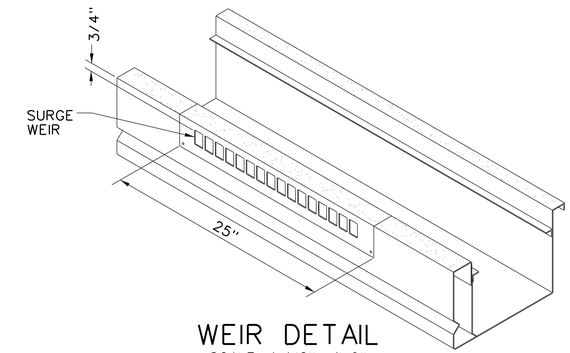

WEIR DETAIL
SCALE: 1 1/2" = 1'-0"

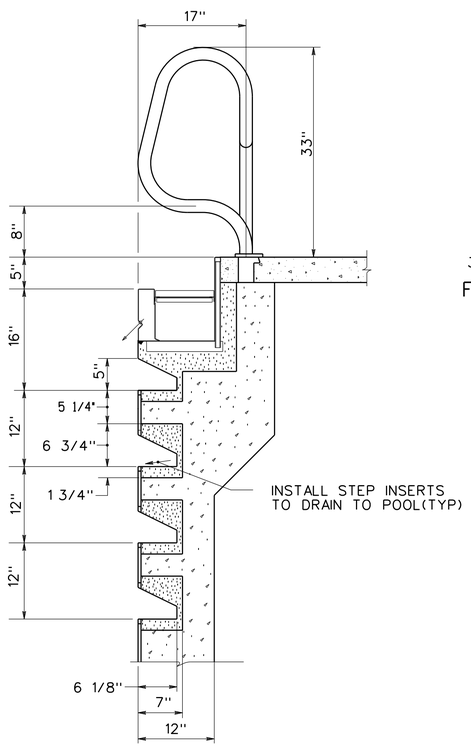

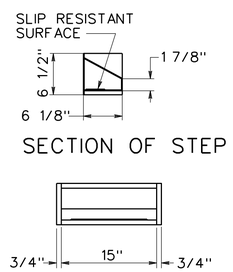

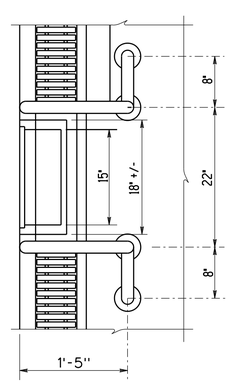

PRETZEL BEND

STAINLESS STEEL GRAB RAILS & RECESSED STEPS - R300
SCALE: 1" = 1'-0"

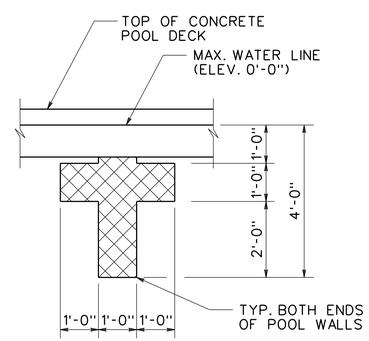

TARGET DETAIL
SCALE: 1/2" = 1'-0"

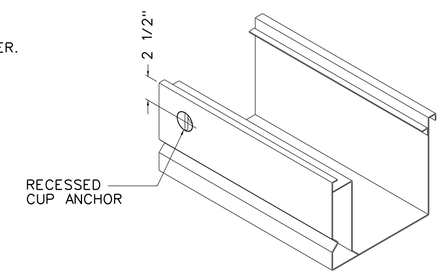

RACING/LIFELINE ANCHOR
SCALE: 3" = 1'-0"

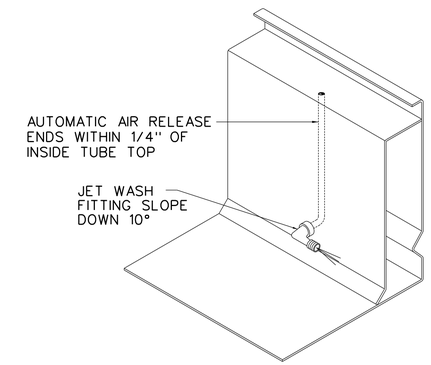

JET WASH FITTING
SCALE: 3" = 1'-=0"

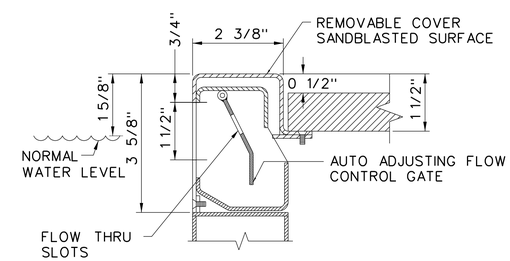

AUTOMATIC WEIR SECTION
SCALE: 6" = 1'-0"

THE EDUCATION LAW OF THE STATE OF NEW YORK PROHIBITS ANY PERSON FROM ALTERING ANYTHING ON THIS DRAWING AND/OR THE ACCOMPANYING SPECIFICATION, UNLESS IT IS UNDER THE DIRECTION OF A LICENSED PROFESSIONAL ENGINEER. WHERE SUCH ALTERATIONS ARE MADE, THE PROFESSIONAL ENGINEER MUST SIGN, SEAL, DATE AND DESCRIBE THE FULL EXTENT OF THE ALTERATIONON THE DRAWING AND/OR IN THE SPECIFICATION.

THE PLANS AND SPECIFICATIONS HEREIN ARE INTENDED FOR THE SUBJECT PROJECT ONLY AS A RESULT OF CONTRACTUAL NEGOTIATIONS BETWEEN THE OWNER AND A.S.BELL ENGINEERING, PC. PLANS AND SPECIFICATIONS WILL BE SUBJECT OF A COPYRIGHT PETITION AND MAY NOT BE REVISED OR REUSED BY ANYONE WITHOUT THE WRITTEN AUTHORITY OF A.S.BELL ENGINEERING PC.

LICENSED PROFESSIONAL ENGINEER ANDREW S. BELL 055448 STATE OF NEW YORK

BELL ENGINEERING
A S BELL ENGINEERING, PC
Andrew S. Bell, P.E.
BE
1732 WESTERN AVENUE
ALBANY, N.Y. 12203
(518) 452-2838
asbellengineering@gmail.com

AQUATTICA
Pools & Water Parks Inc.
518 456-6015
gschuh1@nycap.rr.com
Albany, NY 12203

GOULD PARK
ASHFORD AVE & BEACON HILL DR
DOBBS FERRY, NY 10522

MISCELLANEOUS DETAILS

DRAWING NO.	SCALE:	DATE:	SHEET NO.
MD-2	AS SHOWN	JANUARY 2019	7 OF 10

BE # 218-021

MD-2.dgn

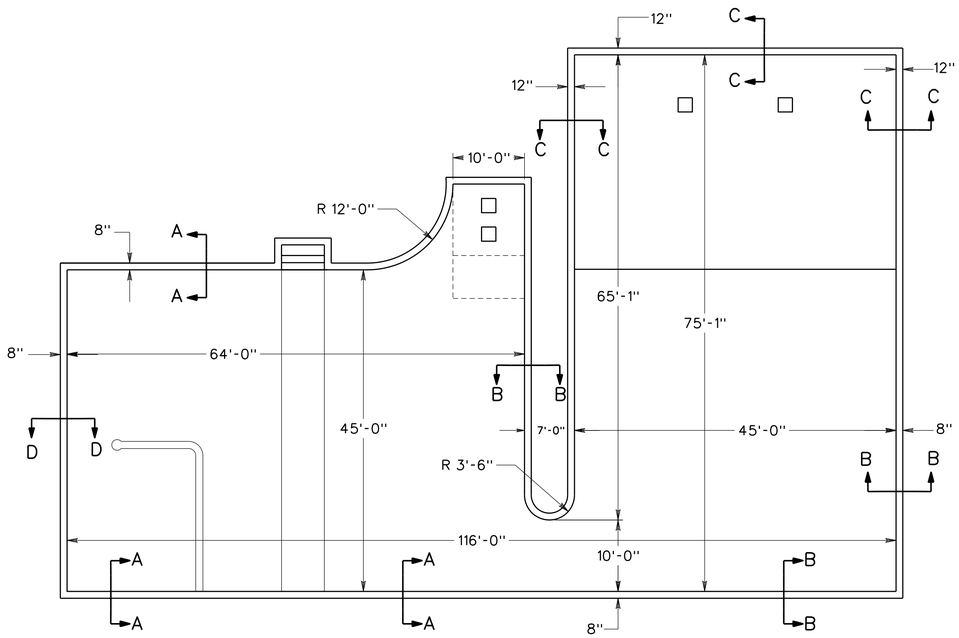

POOL KEY PLAN - MAIN

SCALE: 3/32" = 1'-0"

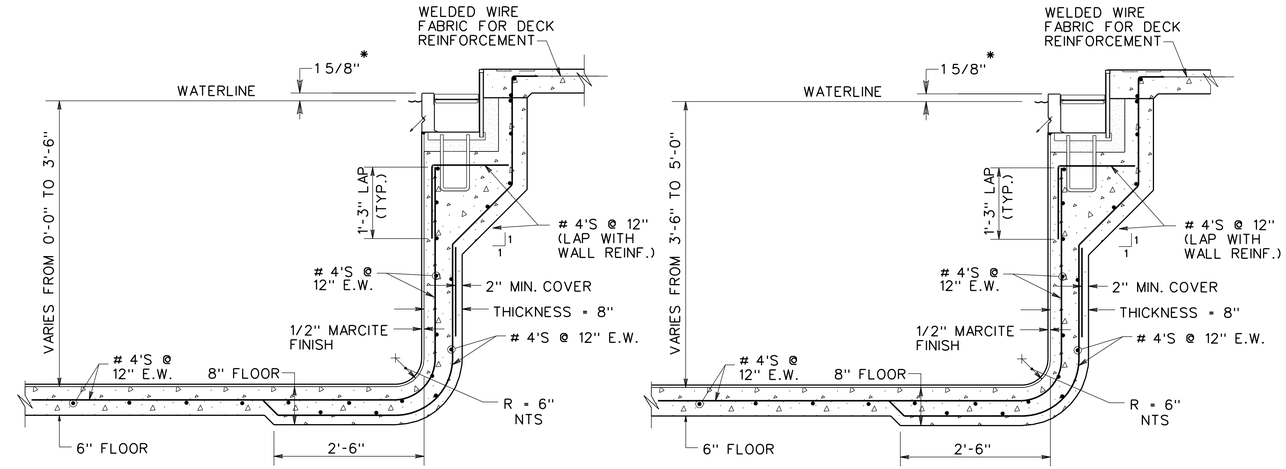

WALL SECTION A-A
(WALL IN SHALLOW END)
SCALE: NONE

* 1 5/8" DENOTES IN-POOL SURGE

WALL SECTION B-B
(WALL IN SHALLOW END)
SCALE: NONE

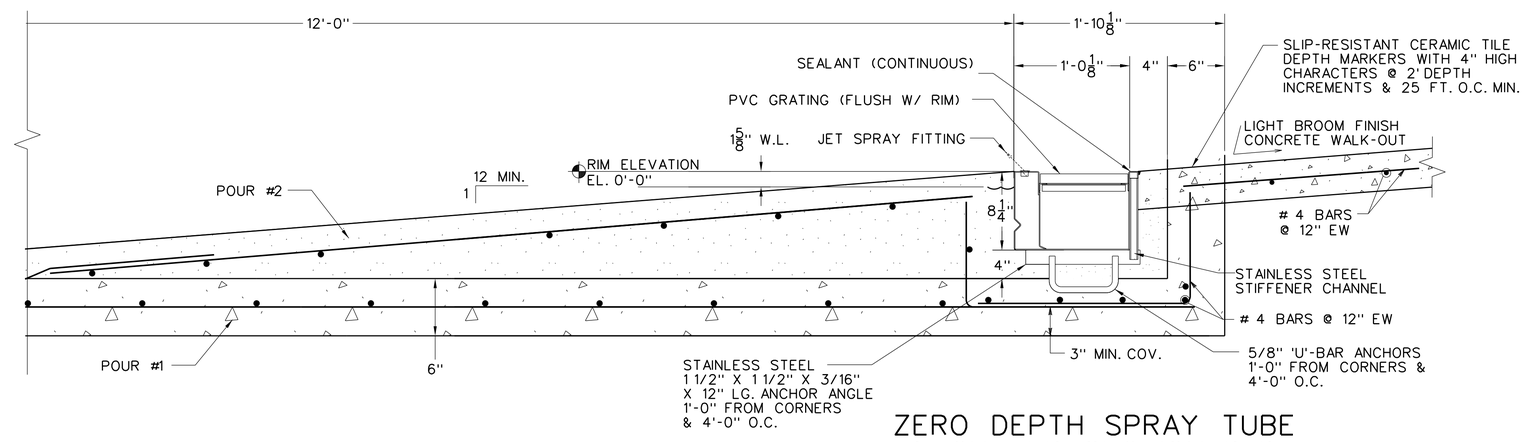

ZERO DEPTH SPRAY TUBE & GUTTER SECTION D-D

SCALE: 1 1/2" = 1'-0"

* 1 5/8" DENOTES IN-POOL SURGE

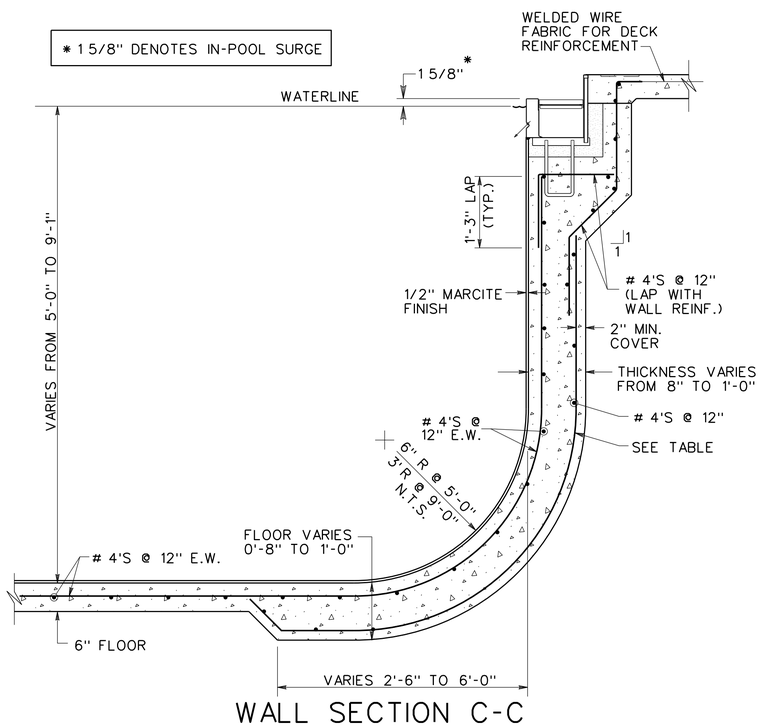

WALL SECTION C-C
(WALL IN DEEP END)
SCALE: NONE

NOTE:

POOL REINFORCING : ASTM A615 GRADE 60
MIN F'C= 4,000 PSI

WATER DEPTH	WALL THICKNESS	REQUIRED REINFORCEMENT
0'-0" 5'-0"	8"	# 4'S @ 12"
6'-0"	9"	# 4'S @ 12"
7'-0"	10"	# 4'S @ 12"
8'-0"	11"	# 4'S @ 12"
9'-1"	12"	# 4'S @ 12"

THE EDUCATION LAW OF THE STATE OF NEW YORK PROHIBITS ANY PERSON FROM ALTERING ANYTHING ON THIS DRAWING AND/OR THE ACCOMPANYING SPECIFICATION, UNLESS IT IS UNDER THE DIRECTION OF A LICENSED PROFESSIONAL ENGINEER. WHERE SUCH ALTERATIONS ARE MADE, THE PROFESSIONAL ENGINEER MUST SIGN, SEAL, DATE AND DESCRIBE THE FULL EXTENT OF THE ALTERATIONON THE DRAWING AND/OR IN THE SPECIFICATION.

THE PLANS AND SPECIFICATIONS HEREIN ARE INTENDED FOR THE SUBJECT PROJECT ONLY AS A RESULT OF CONTRACTUAL NEGOTIATIONS BETWEEN THE OWNER AND A.S.BELL ENGINEERING, PC. PLANS AND SPECIFICATIONS WILL BE SUBJECT OF A COPYRIGHT PETITION AND MAY NOT BE REVISED OR REUSED BY ANYONE WITHOUT THE WRITTEN AUTHORITY OF A.S.BELL ENGINEERING PC.

LICENSED PROFESSIONAL ENGINEER ANDREW S. BELL 055448 STATE OF NEW YORK

AQUATTICA Pools & Water Parks Inc.
518 456-6015
gschuh1@nycap.rr.com
Albany, NY 12203

BELL ENGINEERING
A S BELL ENGINEERING, PC
Andrew S. Bell, P.E.
BE
1732 WESTERN AVENUE
ALBANY, N.Y. 12203
(518) 452-2838
asbellengineering@gmail.com

GOULD PARK
ASHFORD AVE & BEACON HILL DR
DOBBS FERRY, NY 10522

WALL SECTIONS

DRAWING NO.	SCALE:	DATE:	SHEET NO.
WS-1	AS SHOWN	JANUARY 2019	8 OF 10

BE # 218-021

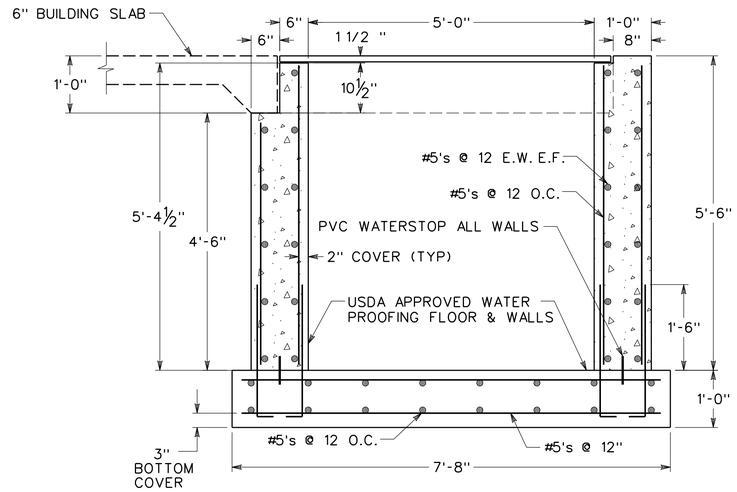

BALANCE TANK SECTION 5'-0"

SCALE: 3/4" = 1'-0"

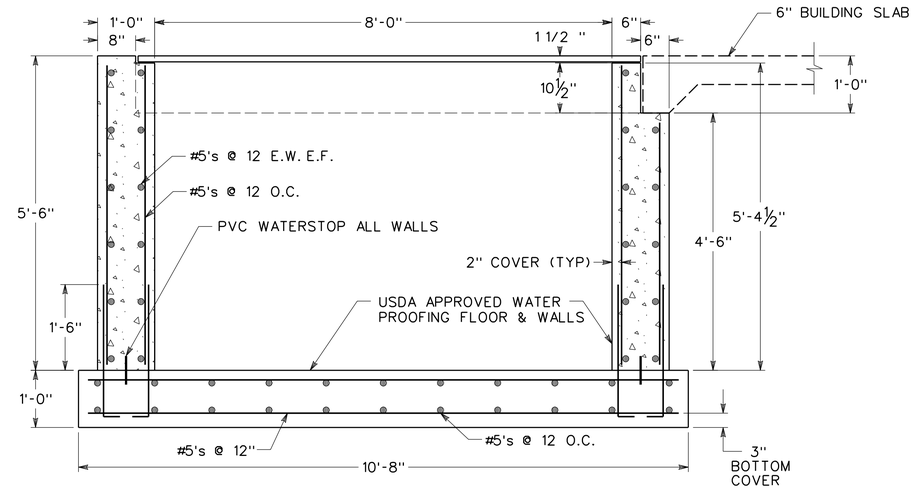

BALANCE TANK SECTION 8'-0"

SCALE: 3/4" = 1'-0"

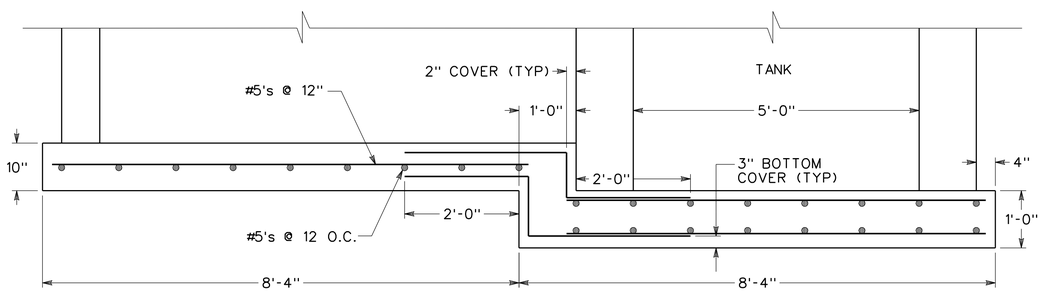

FOOTING END ELEVATION

SCALE: 3/4" = 1'-0"

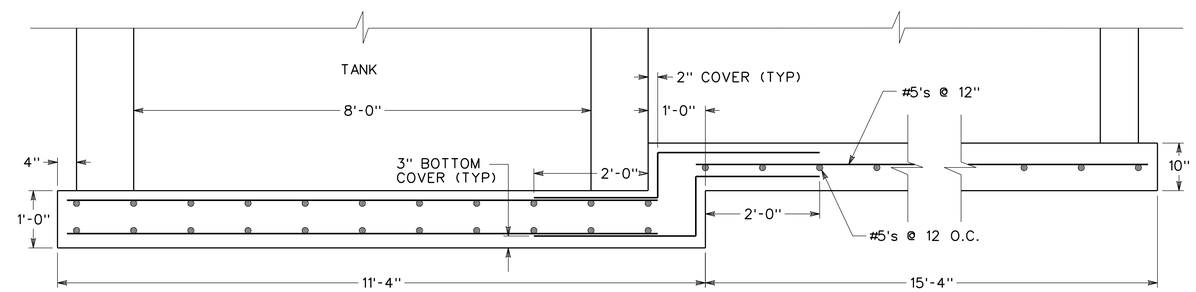

FOOTING SIDE ELEVATION

SCALE: 3/4" = 1'-0"

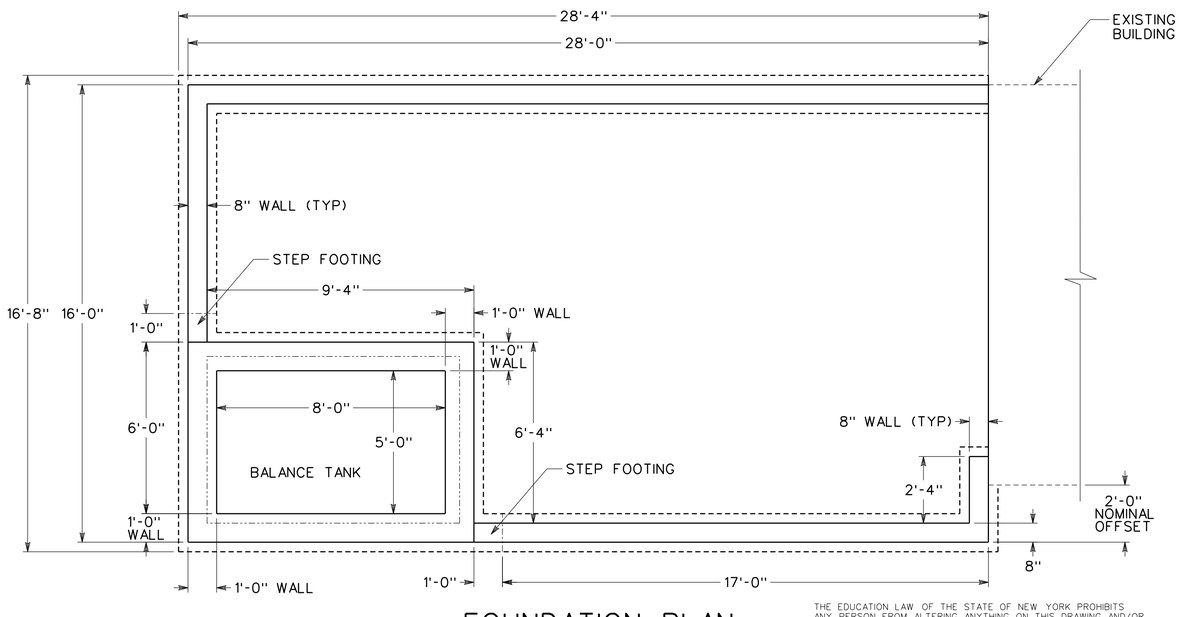

FOUNDATION PLAN

SCALE: 3/8" = 1-0"

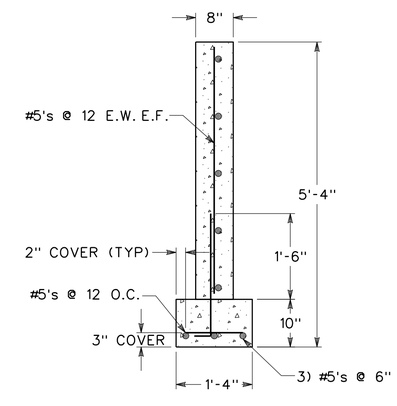

WALL SECTION (TYP)

SCALE: 3/4" = 1'-0"

THE EDUCATION LAW OF THE STATE OF NEW YORK PROHIBITS ANY PERSON FROM ALTERING ANYTHING ON THIS DRAWING AND/OR THE ACCOMPANYING SPECIFICATION, UNLESS IT IS UNDER THE DIRECTION OF A LICENSED PROFESSIONAL ENGINEER. WHERE SUCH ALTERATIONS ARE MADE, THE PROFESSIONAL ENGINEER MUST SIGN, SEAL, DATE AND DESCRIBE THE FULL EXTENT OF THE ALTERATIONON THE DRAWING AND/OR IN THE SPECIFICATION.

THE PLANS AND SPECIFICATIONS HEREIN ARE INTENDED FOR THE SUBJECT PROJECT ONLY AS A RESULT OF CONTRACTUAL NEGOTIATIONS BETWEEN THE OWNER AND A.S.BELL ENGINEERING, PC. PLANS AND SPECIFICATIONS WILL BE SUBJECT OF A COPYRIGHT PETITION AND MAY NOT BE REVISED OR REUSED BY ANYONE WITHOUT THE WRITTEN AUTHORITY OF A.S.BELL ENGINEERING PC.

LICENSED PROFESSIONAL ENGINEER ANDREW S. BELL 055448 STATE OF NEW YORK

BELL ENGINEERING
A S BELL ENGINEERING, PC
Andrew S. Bell, P.E.
BE
1732 WESTERN AVENUE
ALBANY, N.Y. 12203
(518) 452-2838
asbellengineering@gmail.com

AQUATTICA
518 456-6015
gschult1@nycap.rr.com
Pools & Water Parks Inc.
Albany, NY 12203

GOULD PARK
ASHFORD AVE & BEACON HILL DR
DOBBS FERRY, NY 10522

EQUIP. BUILDING FOUNDATION

DRAWING NO.	SCALE:	DATE:	SHEET NO.
EB-1	AS SHOWN	JANUARY 2019	9 OF 10

EB-1.dgn

BE # 218-021

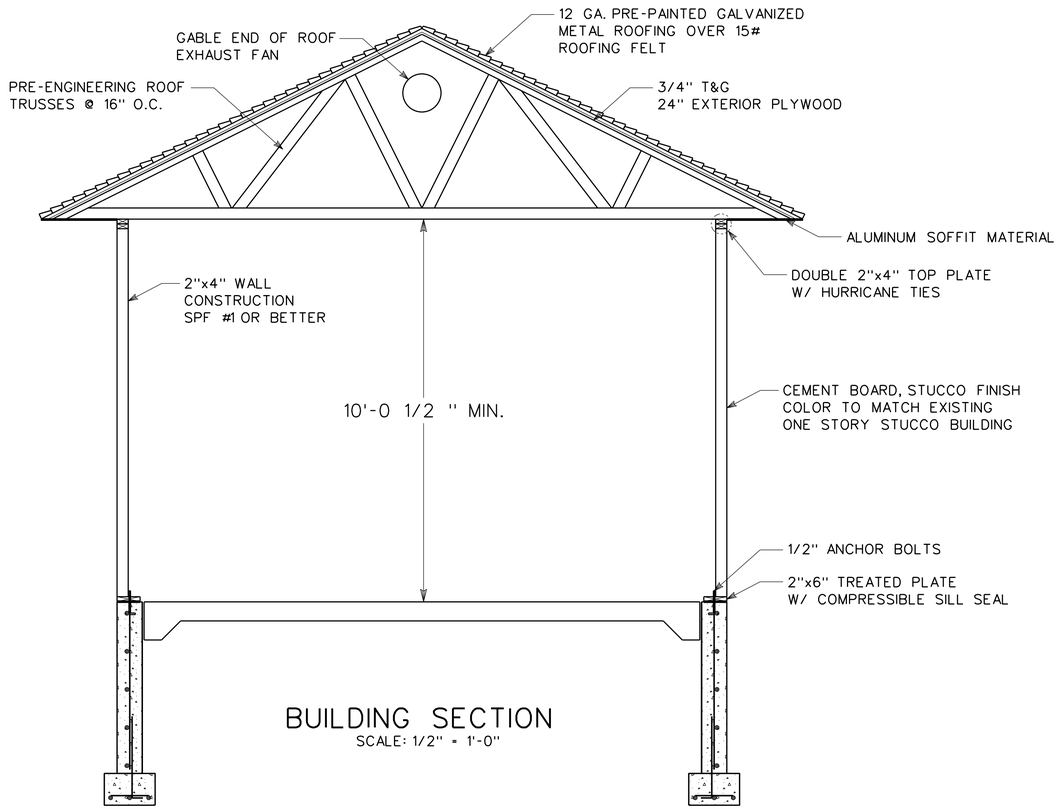

BUILDING SECTION
SCALE: 1/2" = 1'-0"

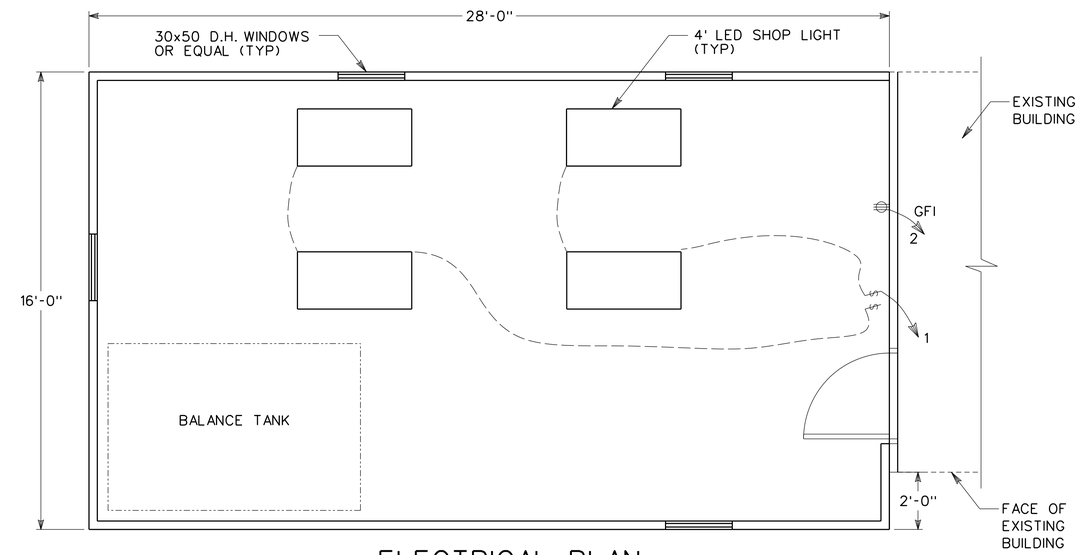

ELECTRICAL PLAN
SCALE: 3/8" = 1'-0"

NOTES:

1. ELECTRIC SHOWN FOR BUILDING ONLY
2. EXHAUST FAN CIRCUIT WITH CONVENIENCE OUTLET CIRCUIT
3. POWER REQUIREMENTS FOR POOL EQUIPMENT SHOWN ON EQ-1.
4. PROVIDE CONDUIT ON EXISTING WALL IF REQUIRED.

LEGEND:

$ SINGLE POLE SWITCH

GFI DUPLEX OUTLET GFI

THE EDUCATION LAW OF THE STATE OF NEW YORK PROHIBITS ANY PERSON FROM ALTERING ANYTHING ON THIS DRAWING AND/OR THE ACCOMPANYING SPECIFICATION, UNLESS IT IS UNDER THE DIRECTION OF A LICENSED PROFESSIONAL ENGINEER. WHERE SUCH ALTERATIONS ARE MADE, THE PROFESSIONAL ENGINEER MUST SIGN, SEAL, DATE AND DESCRIBE THE FULL EXTENT OF THE ALTERATIONON THE DRAWING AND/OR IN THE SPECIFICATION.

THE PLANS AND SPECIFICATIONS HEREIN ARE INTENDED FOR THE SUBJECT PROJECT ONLY AS A RESULT OF CONTRACTUAL NEGOTIATIONS BETWEEN THE OWNER AND A.S.BELL ENGINEERING, PC. PLANS AND SPECIFICATIONS WILL BE SUBJECT OF A COPYRIGHT PETITION AND MAY NOT BE REVISED OR REUSED BY ANYONE WITHOUT THE WRITTEN AUTHORITY OF A.S.BELL ENGINEERING PC.

LICENSED PROFESSIONAL ENGINEER
ANDREW S. BELL
055448
STATE OF NEW YORK

BELL ENGINEERING
A S BELL ENGINEERING, PC
Andrew S. Bell, P.E.
BE
1732 WESTERN AVENUE
ALBANY, N.Y. 12203
(518) 452-2838
asbellengineering@gmail.com

AQUATTICA
518 456-6015
gschult1@nycap.rr.com
Pools & Water Parks Inc.
Albany, NY 12203

GOULD PARK
ASHFORD AVE & BEACON HILL DR
DOBBS FERRY, NY 10522

EQUIPMENT BUILDING

DRAWING NO.	SCALE:	DATE:	SHEET NO.
EB-2	AS SHOWN	JANUARY 2019	10 OF 10

BE # 218-021

EB-2.dgn